EUCHNER

Operating Instructions

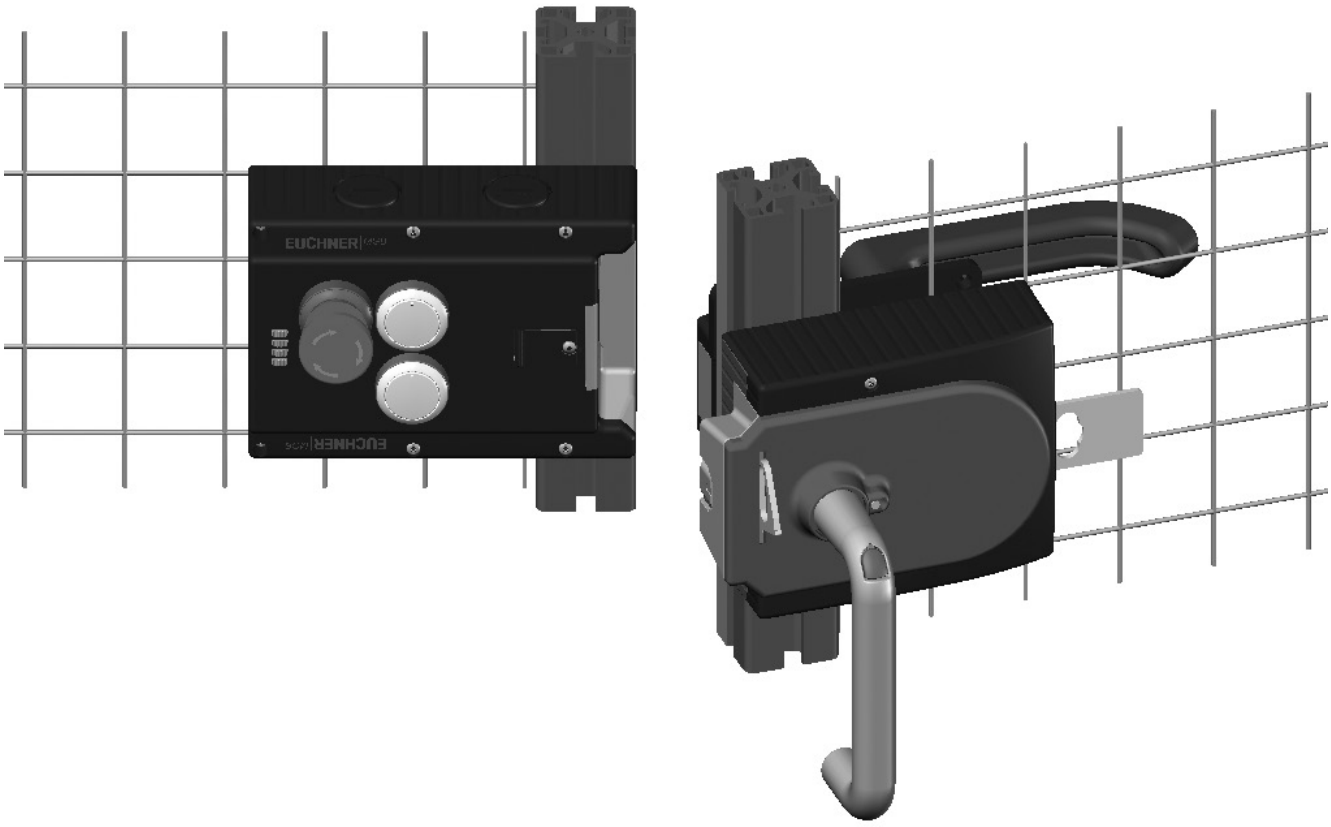

Safety Systems

MGB-L1…-AR.-… / MGB-L2…-AR.-…
MGB-L1…-AP.-… / MGB-L2…-AP.-…

EN

Contents

1. About this document 4
1.1. Scope 4
1.1.1. Notes on other product versions 4
1.2. Target group 4
1.3. Key to symbols 4
1.4. Supplementary documents 5

2. Cyber security and data usage 6
2.1. Notes on MR and CRA 6
2.1.1. Remaining cyber security risks 6
2.1.2. Handling and reporting vulnerabilities 7
2.2. Note on Directive 2014/53/EU RED (Radio Equipment Directive) and Delegated Regulation (EU) 2022/30 7

3. Correct use 8
3.1. Main differences between MGB-AP and MGB-AR 9

4. Description of the safety function 10

5. Exclusion of liability and warranty 11

6. General safety precautions 11

7. Function 12
7.1. Guard locking for version MGB-L1 12
7.2. Guard locking for version MGB-L2 13

8. System overview 14
8.1. Locking module MGB-L.-… 14
8.2. Handle module MGB-H-… 14
8.3. Escape release MGB-E-… (optional) 14
8.4. Dimension drawing 15

9. Manual release 16
9.1. Auxiliary release 16
9.2. Emergency release (can be retrofitted) 17
9.2.1. Actuating emergency release 17
9.3. Lockout mechanism 17
9.4. Escape release (optional) 17
9.4.1. Preparing escape release 18

10. Mounting 20
10.1. Mounting lens 21

11. Changing actuating direction (here: from right to left) 23

12. Protection against environmental effects 24

13. Electrical connection 25
13.1. Notes about UL 26
13.2. Safety in case of faults 26
13.3. Fuse protection for power supply 26
13.4. Requirements for connecting cables 27
13.5. Notes on cable laying 27
13.6. Changing device configuration (using DIP switches) 28
13.6.1. Changing system family (AR/AP switching) 28
13.6.2. Deactivating guard lock monitoring 29
13.6.3. Activating release monitoring 29
13.7. Notes on operation with control systems 30
13.8. Connection of guard locking control 31
13.9. Terminal assignment and contact description 32
13.10. Operation as separate device 33
13.11. Operation in an AR switch chain 34
13.12. Information on operation in an AR switch chain 35
13.12.1. System times 35
13.12.2. Wiring an AR switch chain 35
13.12.3. Number of devices in switch chains 35
13.12.4. Resetting in switch chains 35
14. Setup 36
14.1. Teach-in operation (only for MGB unicode) 36
14.2. Mechanical function test 36
14.3. Electrical function test 37
15. Technical data 38
15.1. Radio frequency approvals (for devices with FCC ID and IC on the type label) 40
15.2. Typical system times 41
16. System states 41
16.1. Key to symbols 41
16.2. System status table MGB-AR 42
16.3. System status table MGB-AP 43
17. Troubleshooting and assistance 44
17.1. Resetting errors 44
17.2. Troubleshooting help on the Internet 44
17.3. Mounting help on the Internet 44
17.4. Application examples 44
18. Service 44
19. Inspection and service 45
20. Declaration of conformity 45

EN

1. About this document

1.1. Scope

These operating instructions are valid for all MGB-L1…-AR.-… / MGB-L2…-AR.-… and MGB-L1…-AP.-… / MGB-L2…-AP.-…. These operating instructions, the document *Safety information* and any associated data sheet form the complete user information for your device.

Series	Version	System families	Product version (hardware version)	Cyber Resilience Act (CRA) compliance [1]
MGB	L1 (guard locking by spring force)	…-AP…	Up to V3.X.X	Not CRA-compliant
		…-AR…	V4.0.X	CRA-compliant
	L2 (guard locking by solenoid force)	…-AP…	Up to V3.X.X	Not CRA-compliant
		…-AR…	V4.0.X	CRA-compliant

1) You will find further information about cyber security in chapter *2. Cyber security and data usage on page 6*

1.1.1. Notes on other product versions

Make sure to use the operating instructions valid for your product version. Please contact our Service department if you have any questions.

1.2. Target group

Design engineers and installation planners for safety systems on machines, as well as setup and servicing staff possessing special expertise in handling safety components.

1.3. Key to symbols

Symbol/depiction	Meaning
	This section applies on operation as MGB-AP
	This section applies on operation as MGB-AR
	In this section, attention must be paid to the DIP switch settings
	Printed document
	Document is available for download at www.euchner.com
 **DANGER WARNING CAUTION**	Safety precautions **Danger** of death or severe injuries **Warning** about possible injuries **Caution** Slight injuries possible
 **NOTICE Important!**	**Notice** about possible device damage **Important** information
Tip	Useful information

1.4. Supplementary documents

The overall documentation for this device consists of the following documents:

Document title (document number)	Contents	
Safety information (2525460)	Basic safety information	
Operating instructions (2119167)	(this document)	
Declaration of conformity	Declaration of conformity	
Any associated data sheet	Item-specific information about deviations or additions	

Important!

Always read all documents to gain a complete overview of safe installation, setup and use of the device. The documents can be downloaded from www.euchner.com. For this purpose, enter the doc. no. or the order number for the device in the search box.

EN

2. Cyber security and data usage

2.1. Notes on MR and CRA

The product was evaluated in accordance with the guidelines of the Machinery Regulation (MR) and the Cyber Resilience Act (CRA) and complies with the requirements of the respective standards when used correctly.

Pay attention to the remaining risks for use and minimize them by taking into account the measures listed here, insofar as they apply to your product.

2.1.1. Remaining cyber security risks

The product can be modified using an internal EUCHNER interface. Pay attention to the following measures in particular for minimizing risks:

- Ensure that the product was not tampered with or compromised during transport or before setup.
- Integrate the product into a trustworthy environment and restrict access to only authorized users and systems.
- Incorporate the product so that physical access to it is minimized.
- Periodically check whether tampering within the meaning of cyber security has occurred.

The following overview provides detailed information about the stated measures.

Product life-cycle phase	Suitable measures for reducing cyber risks (examples)
Procurement	Ensure that the device was not tampered with or compromised during transport or before setup: - Obtain the product exclusively from trustworthy sources. - Check the product on goods receipt and before installation. The packaging, seal and other safety components must be undamaged and must not show any signs of tampering.
Configuration and installation	Incorporate the product so that physical access to it is minimized. - Lay cables with protection. - Install the product in a concealed position.
	Operate the product exclusively within a trustworthy environment: - Protect the product or the communication interface from being physically accessed by unauthorized persons. - Protect the installation or installation part from being physically accessed by unauthorized persons.
	Follow the generally recognized rules for planning, operating and securing networks: - Deactivate unused services. - Deactivate unused ports. - Use IP and MAC filters. - Always use the latest software or firmware. - Use the product only in trustworthy networks. - Use network segmentation to restrict access. - Enable the option of evaluating access logs, system statistics and relevant system parameters if necessary. - Secure the communication via public networks by using VPN connections.
Operation	Periodically check whether tampering within the meaning of cyber security has occurred: - Check the product for signs of tampering, e.g. opened housings. - Check whether devices have been connected in between or whether conspicuous cables have been retrofitted. - Evaluate access logs, statistics and system parameters.
	Installations and products must always comply with the required security level: - Use the latest software or firmware. - Use the latest product version (hardware version). Replace the product if necessary. - React to known vulnerabilities immediately. - Regularly check access rights.
Disposal	To prevent unauthorized access, delete sensitive data from the product's memory and from the software: - Perform a factory reset on the product. - Delete confidential settings or database contents. - Shred the product or data memory media if the data cannot be deleted.

2.1.2. Handling and reporting vulnerabilities

EUCHNER publishes vulnerabilities on the CERT@VDE page at www.certvde.com.

The EUCHNER PSIRT (Product Security Incident Response Team) is the central point of contact for reporting potential safety gaps in our products and services.

You can report any potential safety gap to the PSIRT.

Further information about PSIRT and vulnerability handling is available at www.euchner.com/en-us/service/cybersecurity/psirt/.

2.2. Note on Directive 2014/53/EU RED (Radio Equipment Directive) and Delegated Regulation (EU) 2022/30

EUCHNER components and systems must not be integrated into public networks.

EUCHNER components are intended only for use in private networks. Use a VPN connection for remote access.

3. Correct use

The system comprises at least one locking module MGB-L1-…/MGB-L2–… and one handle module MGB-H…

The safety system MGB is an interlocking device with guard locking (type 4). Devices with unicode evaluation possess a high coding level, devices with multicode evaluation possess a low coding level.

The locking module can be configured with the aid of DIP switches. Depending on the setting, the locking module behaves like an AP or AR device (see chapter *3.1. Main differences between MGB-AP and MGB-AR on page 9*). In addition, the guard lock monitoring can be switched on or off. More detailed information about the possible settings is available in chapter *13.6. Changing device configuration (using DIP switches) on page 28*.



The following applies to active guard lock monitoring:

In combination with a movable guard and the machine control, this safety component prevents the guard from being opened while a dangerous machine function is being performed.

This means:

- Starting commands that cause a dangerous machine function must become active only when the guard is closed and locked.
- Guard locking must not be released until the dangerous machine function has ended.
- Closing and locking a guard must not cause automatic starting of a dangerous machine function. A separate start command must be issued. For exceptions, refer to EN ISO 12100 or relevant C-standards.

The following applies to inactive guard lock monitoring:

In combination with a movable guard and the machine control, this safety component prevents dangerous machine functions from occurring while the guard is open. A stop command is activated if the guard is opened during the dangerous machine function. With inactive guard lock monitoring, guard locking must be used only for process protection.

This means:

- Starting commands that cause a dangerous machine function must become active only when the guard is closed.
- Opening the guard triggers a stop command.
- Closing a guard must not cause automatic starting of a dangerous machine function. A separate start command must be issued. For exceptions, refer to EN ISO 12100 or relevant C-standards.

Before the device is used, a risk assessment must be performed on the machine, e.g. in accordance with the following standards:

- EN ISO 13849-1
- EN ISO 12100
- EN IEC 62061

Correct use includes observing the relevant requirements for installation and operation, particularly based on the following standards:

- EN ISO 13849-1
- EN ISO 14119
- EN 60204-1

The safety system MGB can be combined only with the intended modules in the MGB system family.

On the modification of system components, EUCHNER provides no warranty for function.



Locking modules with the configuration MGB-AR can be integrated into an AR switch chain.

Connection of several devices in an AR switch chain is permitted only using devices intended for series connection in an AR switch chain. Check the operating instructions for the related device.



Important!

- The user is responsible for the proper integration of the device into a safe overall system. For this purpose, the overall system must be validated, e.g. in accordance with EN ISO 13849-1.

Important!

- Correct use requires observing the permissible operating parameters (see chapter *15. Technical data on page 38*).
- If a data sheet is included with the product, the information on the data sheet applies.

Table 1: Possible combinations for MGB components

Evaluation unit	Handle module
	MGB-H-… from V2.0.0
MGB…AR/AP from V3.0.0	●

Key to symbols	●	Combination possible

3.1. Main differences between MGB-AP and MGB-AR

System family	Symbol	Use
MGB-AP	AP	Optimized for operation in safe control systems. If series connection is not necessary, the number of terminals required can be reduced using this system family.
MGB-AR	AR	Linking of several guards on one shutdown path. As a consequence, several safety doors can be very simply polled using one evaluation unit or two control system inputs.

EN

4. Description of the safety function

Devices from this series feature the following safety functions:

The following applies to active guard lock monitoring:

DIP

Monitoring of guard locking and the position of the guard (interlocking device with guard locking according to EN ISO 14119)

- Safety function (see chapter *7. Function on page 12*):
  - The safety outputs are switched off when guard locking is released (monitoring of the locking element). **Important:** This applies only if guard lock monitoring is active.
  - The safety outputs are switched off when the guard is open.
  - Guard locking can be activated only when the bolt tongue is located in the locking module (prevention of inadvertent locking position (faulty closure protection)).
- Safety characteristics: category, Performance Level, PFH_D (see chapter *15. Technical data on page 38*).

Control of guard locking (applies only to MGB-L1)

- Safety function: If the device is used as guard locking for personnel protection, control of guard locking must be regarded as a safety function.

  The safety level of guard locking control is determined by the device $PFH_{D\ int.}$ and by the external control (e.g. $PFH_{D\ ext.}$ of the standstill monitor).

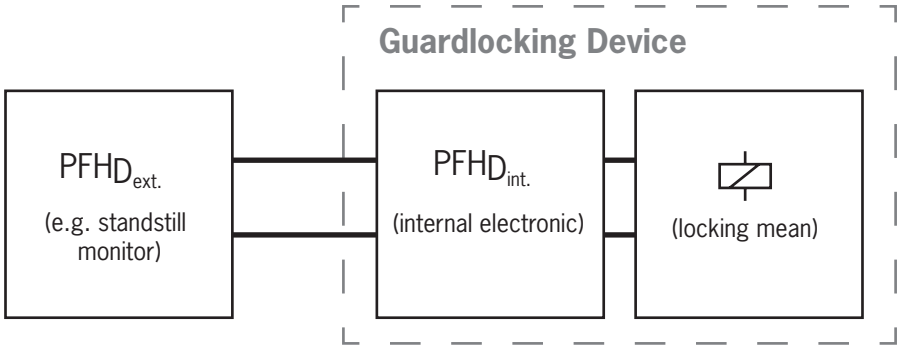

- Safety characteristics: category, Performance Level, PFH_D (see chapter *15. Technical data on page 38*).

The following applies to inactive guard lock monitoring:

DIP

Monitoring of the guard position (interlocking device according to EN ISO 14119)

- Safety function: The safety outputs are switched off when the guard is open (see chapter *7. Function on page 12*).
- Safety characteristics: category, Performance Level, PFH_D (see chapter *15. Technical data on page 38*).

The following applies to devices with emergency stop:

Emergency stop (emergency stop device according to EN ISO 13850)

- Safety function: emergency stop function
- Safety characteristics: B_{10D} value (see chapter *15. Technical data on page 38*)

5. Exclusion of liability and warranty

In case of failure to comply with the conditions for correct use stated above, or if the safety regulations are not followed, or if any servicing is not performed as required, liability will be excluded and the warranty void.

6. General safety precautions

Safety switches fulfill personnel protection functions. Incorrect installation or tampering can lead to fatal injuries to personnel.

Check the safe function of the guard particularly

- after any setup work
- after the replacement of an MGB component
- after an extended period without use
- after every fault
- after any change to the DIP switch position.

Independent of these checks, the safe function of the guard should be checked at suitable intervals as part of the maintenance schedule.

WARNING

Danger to life due to improper installation or due to bypassing (tampering). Safety components fulfill a personnel protection function.

- Safety components must not be bypassed, turned away, removed or otherwise rendered ineffective. On this topic pay attention in particular to the measures for reducing the possibility of bypassing according to EN ISO 14119:2013, section 7.
- The switching operation is allowed to be triggered only by the intended handle module MGB-H… that is positively fastened to the guard.
- Prevent bypassing by means of replacement actuators (only for multicode evaluation). For this purpose, restrict access to actuators and to keys for releases, for example.
- Mounting, electrical connection and setup only by authorized personnel possessing the following knowledge:
  - specialist knowledge in handling safety components
  - knowledge about the applicable EMC regulations
  - knowledge about the applicable regulations on operational safety and accident prevention.

Important!

Prior to use, read the operating instructions and keep these in a safe place. Ensure the operating instructions are always available during mounting, setup and servicing. EUCHNER cannot provide any warranty in relation to the readability of the CD for the storage period required. For this reason, you should archive a printed copy of the operating instructions. You can download the operating instructions from www.euchner.com.

EN

7. Function

Together with a handle module, the locking module makes it possible to lock movable guards. The combination also serves as a mechanical door stop at the same time.

DIP

The following switch-on condition applies to the safety outputs FO1A and FO1B (also see chapters *16.2. System status table MGB-AR on page 42* and *16.3. System status table MGB-AP on page 43*):

Configuration	System family	MGB-AR		MGB-AP	
	Guard lock monitoring	Active	Inactive	Active	Inactive
Condition	No fault in the device	TRUE	TRUE	TRUE	TRUE
	Guard closed	TRUE	TRUE	TRUE	TRUE
	Bolt tongue inserted into locking module	TRUE	TRUE	TRUE	TRUE
	Guard locking active	TRUE	irrelevant	TRUE	irrelevant
	In case of series connection: Signal available from the upstream switch on the safety inputs FI1A and FI1B **In case of separate operation:** DC 24 V present at the safety inputs FI1A and FI1B	TRUE	TRUE	irrelevant	irrelevant
		FO1A and FO1B are **ON**			

The locking module detects the position of the guard and the position of the bolt tongue. The position of guard locking is also monitored.

Guard lock monitoring can be deactivated using DIP switches (see chapter *13.6. Changing device configuration (using DIP switches) on page 28*).

Important!

For use as guard locking for personnel protection in accordance with EN ISO 14119, guard lock monitoring must be active.

The bolt tongue in the handle module is moved into and out of the locking module by actuation of the door handle.

When the bolt tongue is fully inserted into the locking module, the locking arm locks the bolt tongue in this position. Depending on version, this locking is by spring force or solenoid force.

7.1. Guard locking for version MGB-L1

(guard locking actuated by spring force and released by power-ON)

Activating guard locking: close guard; no voltage at the solenoid.

Releasing guard locking: apply voltage to the solenoid.

The spring-operated guard locking functions in accordance with the closed-circuit current principle. If the voltage is interrupted at the solenoid, guard locking remains active and the guard cannot be opened directly.

Important!

If the guard is open when the power supply is interrupted and is then closed, guard locking is activated. This can lead to persons being locked in unintentionally.

As long as the locking arm is closed, the bolt tongue cannot be pulled out of the locking module and the guard is locked.

When voltage is applied to the guard locking solenoid, the locking arm is opened and the bolt tongue is released. The guard can be opened.

7.2. Guard locking for version MGB-L2

(guard locking actuated by power-ON and released by spring force)

Important!

- Guard locking devices according to the open-circuit current principle are not intended for protecting personnel.
- Use as guard locking for personnel protection is possible only in special cases, after strict assessment of the accident risk (see EN ISO 14119:2013, section 5.7.1)!

Activating guard locking: apply voltage to the solenoid.

Releasing guard locking: disconnect voltage from the solenoid.

The magnetically actuated guard locking operates in accordance with the open-circuit current principle. If the voltage is interrupted at the solenoid, guard locking is released and the guard can be opened directly.

The guard can be opened as long as no voltage is applied to the guard locking solenoid.

When voltage is applied to the guard locking solenoid, the locking arm is held in the locked position and the guard is locked.

8. System overview

8.1. Locking module MGB-L.-…

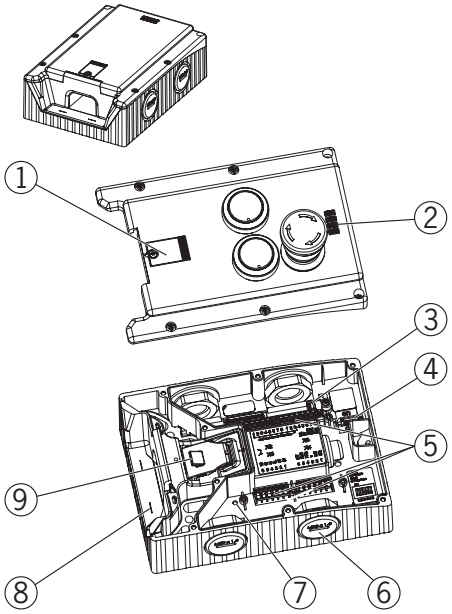

Fig. 1: Locking module MGB-L.–…

Key:
① Cover for auxiliary release
② LED indicator
③ Jumper
④ DIP switches
⑤ Terminals X2-X5
⑥ Depending on version:
Cable entry M20x1.5 or plug connector
⑦ Internal reset
⑧ Auxiliary marking for maximum permitted mounting distance
⑨ Locking arm

Notice:
Depending on version, additional controls and indicators may be integrated into the cover and a mounting plate can be included.
See associated data sheet.

8.2. Handle module MGB-H-…

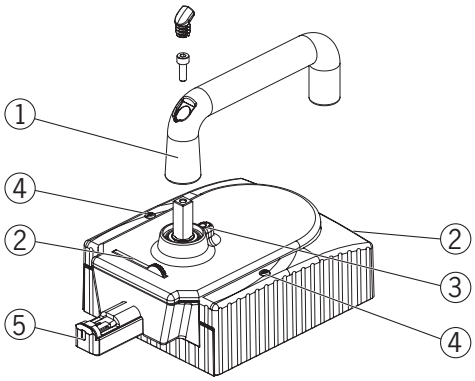

Fig. 2: Handle module MGB-H-…

Key:
① Door handle
② Fold-out lockout mechanism
(optional: second, automatically extending lockout mechanism)
③ Locking pin for handle adjustment
④ Locking screws T10 for housing cover
⑤ Bolt tongue

Notice:
Depending on version, a mounting plate can be included.
See associated data sheet.

8.3. Escape release MGB-E-… (optional)

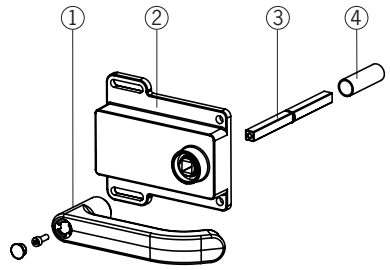

Fig. 3: Escape release MGB-E-…

Key:
① Door handle
② Housing
③ Actuation axis 8 x 8 mm
(different lengths available)
④ Protective sleeve

Notice:
Depending on version, a mounting plate can be included.
See associated data sheet.

8.4. Dimension drawing

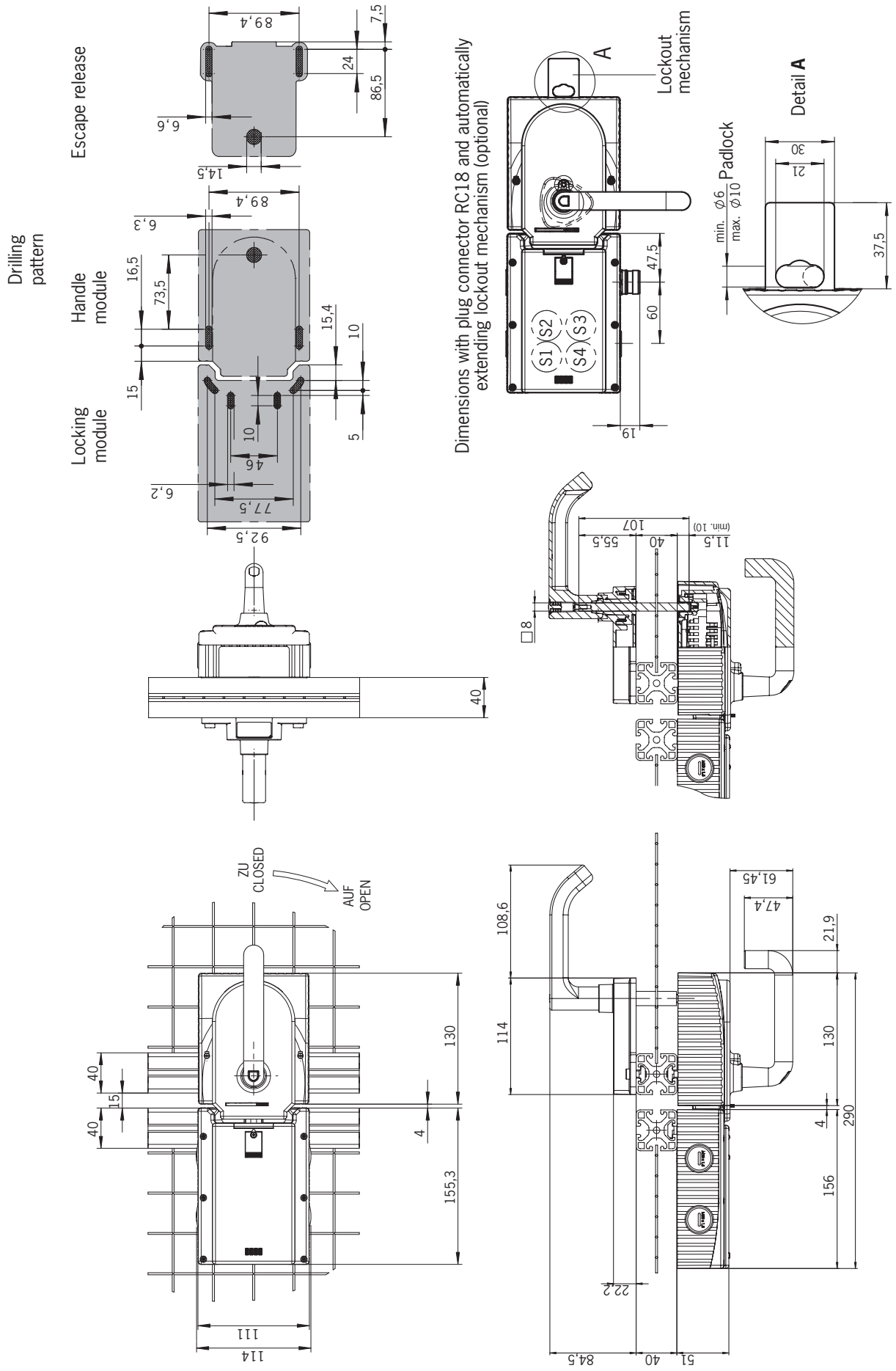

Fig. 4: Dimension drawing for mounted MGB, without optional mounting plates

EN

9. Manual release

Some situations require guard locking to be released manually (e.g. malfunctions or an emergency). A function test should be performed after release.

Further information on this topic can be found in the standard EN ISO 14119:2013, section 5.7.5.1. The device can feature the following release functions:

9.1. Auxiliary release

In the event of servicing, guard locking can be released with the auxiliary release irrespective of the state of the solenoid (see *Fig. 5*).

DIP

- When release monitoring is active, the system enters into a latching fault when the auxiliary release is actuated. See *System status table*, *signal sequence incorrect* status (DIA red, Lock flashes 1 time).
- The system might not enter into a latching fault if the auxiliary release is actuated very slowly.

Important!

- The auxiliary release must be reset at the control system level, e.g. by means of a plausibility check (status of the safety outputs does not match the guard locking control signal). See EN ISO 14119:2013, sec. 5.7.5.4.
- The auxiliary release is not a safety function.
- The machine manufacturer must select and use a suitable release (escape release, emergency release, etc.) for a specific application. A hazard assessment is required for this purpose. It may be necessary to take specifications from a product standard into account.
- The correct function must be checked at regular intervals.
- Loss of the release function due to mounting errors or damage during mounting. Check the release function every time after mounting.
- Observe the notes on any associated data sheets.

The locking screw must be screwed back in and sealed (with sealing lacquer, for example) after mounting and after every use of the auxiliary release. Tightening torque 0.5 Nm.

1. Undo locking screw.
2. Lift locking arm using a screwdriver and actuate door handle.

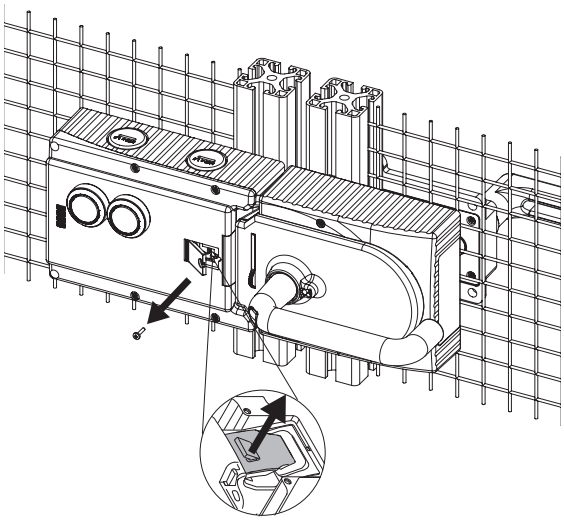

Fig. 5: Auxiliary release

9.2. Emergency release (can be retrofitted)

This permits opening of a locked guard from outside the danger area without tools. For mounting, see the mounting supplement.

Important!

- It must be possible to operate the emergency release manually from outside the protected area without tools.
- The emergency release must possess a marking indicating that it may be used only in an emergency.
- The actuator must not be under tensile stress during manual release.
- The release function meets all other requirements from EN ISO 14119.
- The emergency release meets the requirements of Category B according to EN ISO 13849-1.
- Loss of the release function due to mounting errors or damage during mounting.
- Check the release function every time after mounting.
- Observe the notes on any associated data sheets.

9.2.1. Actuating emergency release

- Press emergency release and turn clockwise by 90° until it clicks into place.

➡ Guard locking is released.

To reset, press the snap-in bolt inward using a small screwdriver or similar tool and turn the emergency release back. The emergency release must be sealed in the free position.

The safety outputs are switched off when the emergency release is actuated. Use the safety outputs to generate a stop command.

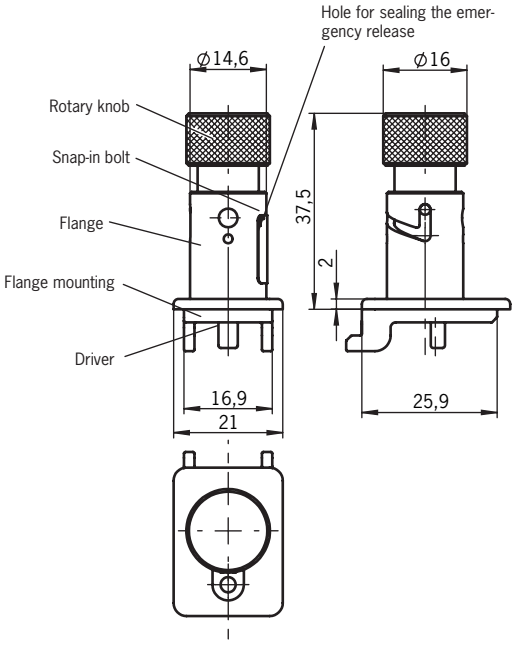

9.3. Lockout mechanism

If the lockout mechanism is pivoted out/extended, the bolt tongue cannot be extended. The lockout mechanism can be secured with padlocks (see *Fig. 6*).

➡ To pivot out, press the grooved part (possible only with bolt tongue retracted).

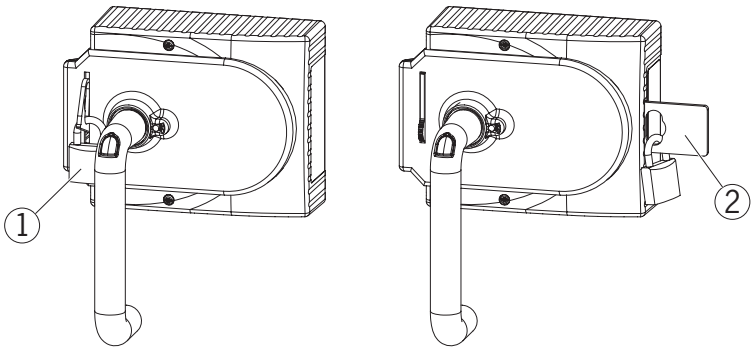

Key:

① Padlock ∅ min. 2 mm, ∅ max. 10 mm
Notice:
You can fit a maximum of 3 locks Ø 8 mm.

② Automatically extending, second lockout mechanism
Padlock ∅ min. 6 mm, ∅ max. 10 mm
Notice:
You can fit a maximum of 3 locks Ø 8 mm per lockout mechanism. The max. load is 30 kg per lockout mechanism.

Fig. 6: Lockout mechanism secured with padlock

9.4. Escape release (optional)

EN

The escape release is used to open a locked guard from the inside without tools.

DIP

When release monitoring is active, the system enters into a latching fault when the escape release is actuated.
See *System status table, signal sequence incorrect* status (DIA red, Lock flashes 1 time).
The system might not enter into a latching fault if the escape release is actuated very slowly.

Important!

- It must be possible to actuate the escape release manually from inside the protected area without tools.
- It must not be possible to reach the escape release from the outside.
- The actuator must not be under tensile stress during manual release.
- The escape release meets the requirements of Category B according to EN ISO 13849-1.

- Fit escape release such that operation, inspection and service are possible.
- The actuation axis for the escape release must be inserted min. 10 mm into the handle module. Note the information on the different profile widths in the next chapter.
- Adjust escape release axis at right angles to the handle module. See *Fig. 4* and *Fig. 8*.

9.4.1. Preparing escape release

(also see *Fig. 7: Preparing escape release on page 19*)

Profile width	Required length Actuation axis		Which EUCHNER parts are required?	Necessary work steps
	Without plates	With mounting plates (4 mm each)		
D	**D+13**	**D+21**		
30 mm	43 mm	51 mm	Standard escape release with 110 mm axis (order no. 100465)	Shorten to required length
40 mm	53 mm	61 mm	Standard escape release with 110 mm axis (order no. 100465) If necessary, extended actuation axis (order no. 106761)	*Without mounting plates:* None *With mounting plates:* Use long actuation axis and protective sleeve and shorten to required length
45 mm	58 mm	66 mm	Standard escape release with 110 mm axis (order no. 100465) **and** extended actuation axis (order no. 106761)	Use long actuation axis and protective sleeve and shorten to required length
50 mm	63 mm	71 mm	Standard escape release with 110 mm axis (order no. 100465) **and** extended actuation axis (order no. 106761)	Use long actuation axis and protective sleeve and shorten to required length

Example without mounting plates:

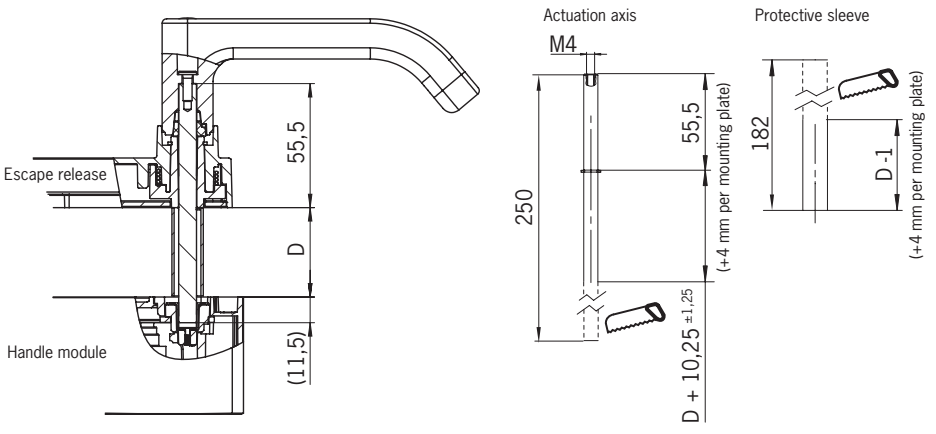

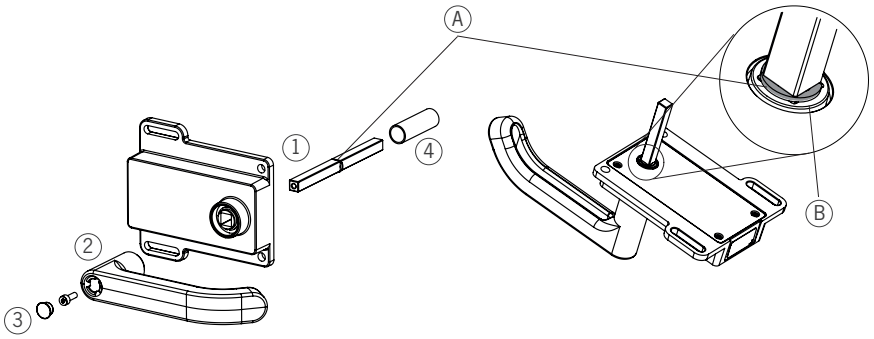

① Insert actuation axis. The snap ring **A** must be in contact with the escape release **B**.
② Fit door handle.
③ Tighten fixing screw with 2 Nm and push in cap.
④ Fit protective sleeve.

Fig. 7: Preparing escape release

10. Mounting

WARNING

Mounting must be performed only by authorized personnel.

With two-leaf hinged doors, one of the two door leaves must also be latched mechanically.

Use a rod latch (Item) or a double-door lock (Bosch Rexroth) for this purpose, for example.

Important!

- In case of flush installation, the operating distances change as a function of the installation depth and the guard material.

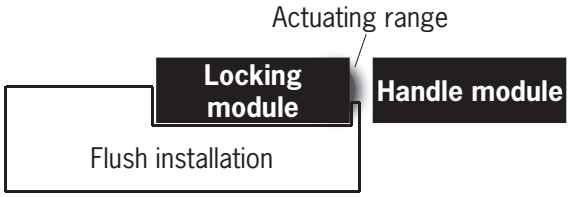

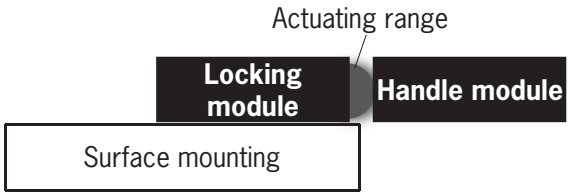

Tip!

- You will find an animation on the mounting process at www.euchner.com.
- The color and labeling of pushbuttons and indicators can be modified.

For mounting steps, see *Fig. 8* and *Fig. 9* to *Fig. 14*.

Attach system such that operation of the auxiliary release as well as inspection and service are possible.

The locking screw must be screwed back in and sealed (with sealing lacquer, for example) after mounting and after every use of the auxiliary release. Tightening torque 0.5 Nm.

10.1. Mounting lens

Mounting

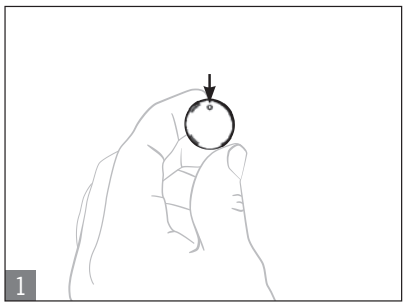

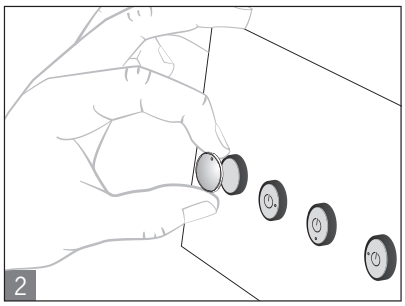

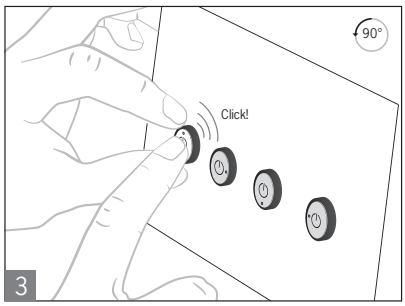

Removal

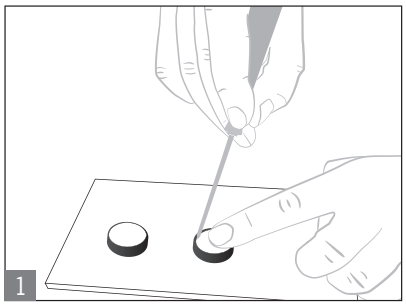

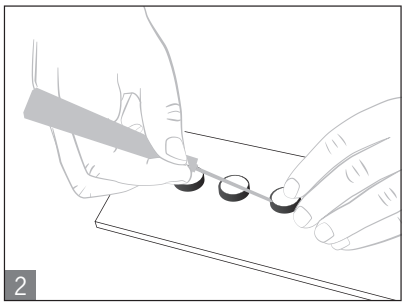



Lens

EN

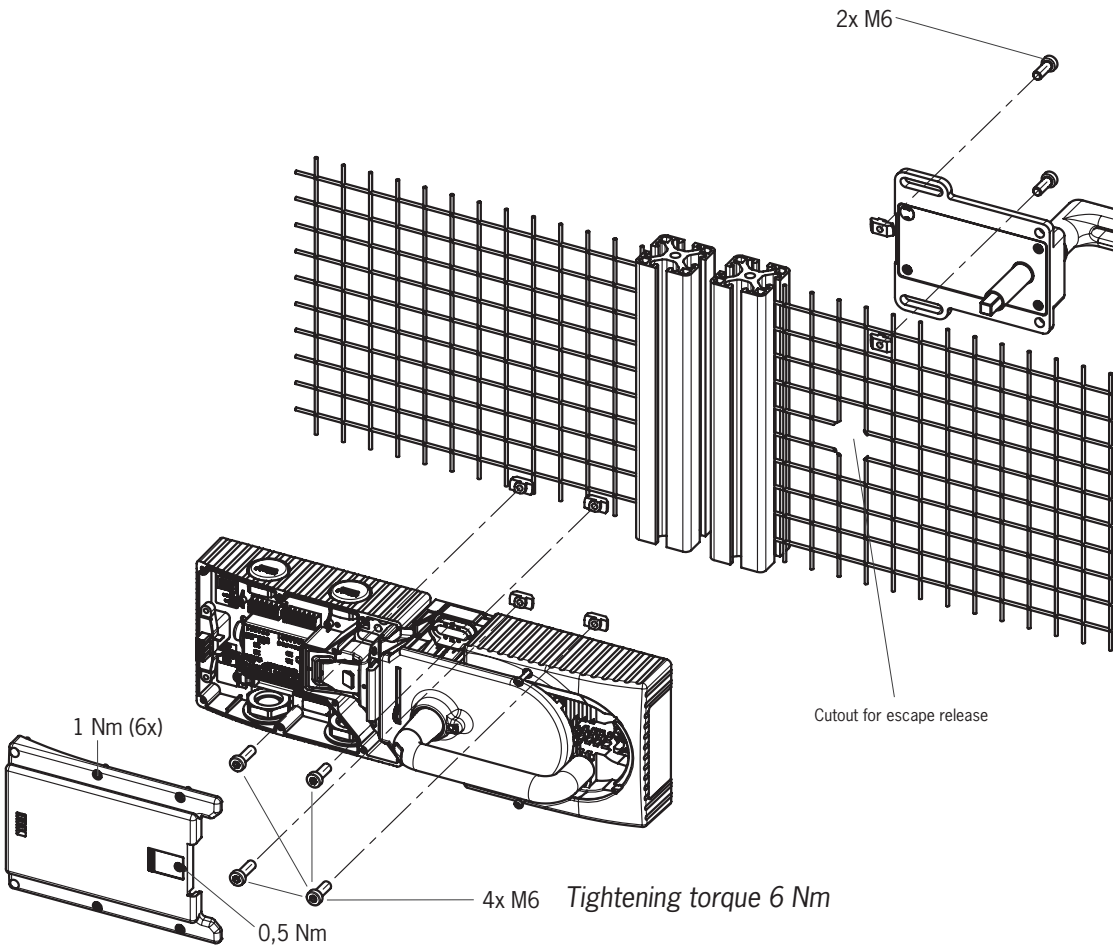

Recommended fixing material:
For mounting on the mounting plate:
DIN 912-M6X25-8.8 ZN CYLINDER HEAD SCREW

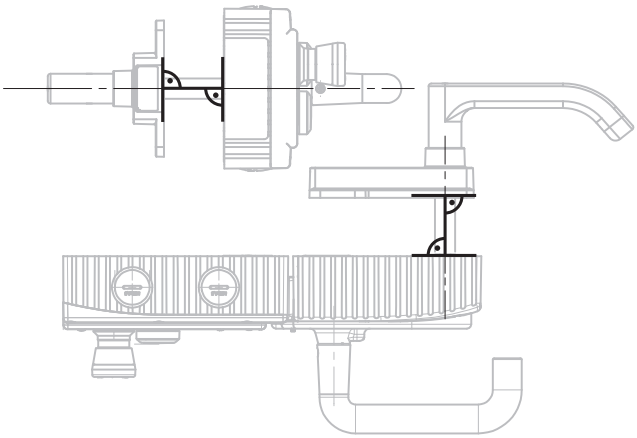

Fig. 8: Installation example for door hinged on the right (general view)

11. Changing actuating direction (here: from right to left)

Important!

It is possible to make this change only when the bolt tongue is not extended and an escape release is not yet mounted.

In the delivery state, the handle module is set either for doors hinged on the right or for doors hinged on the left.

Based on the example of a handle module for doors hinged on the right this means:

- The guard opens by pressing down the door handle.
- The system is mounted the other way around for doors hinged on the left. In other words, the guard opens by pressing up the door handle (see *Fig. 9*). For this reason, the actuating direction of the door handle must be changed (see *Fig. 9* to *Fig. 14*).

(Similarly on handle modules for doors hinged on the left)

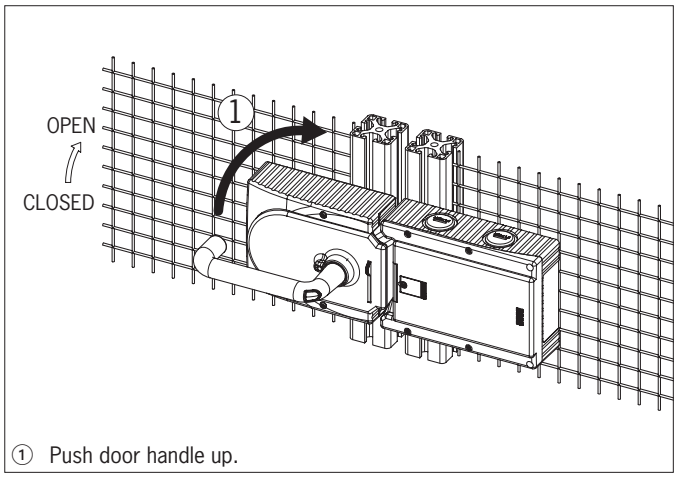

① Push door handle up.

Fig. 9: Changing actuating direction, step ①

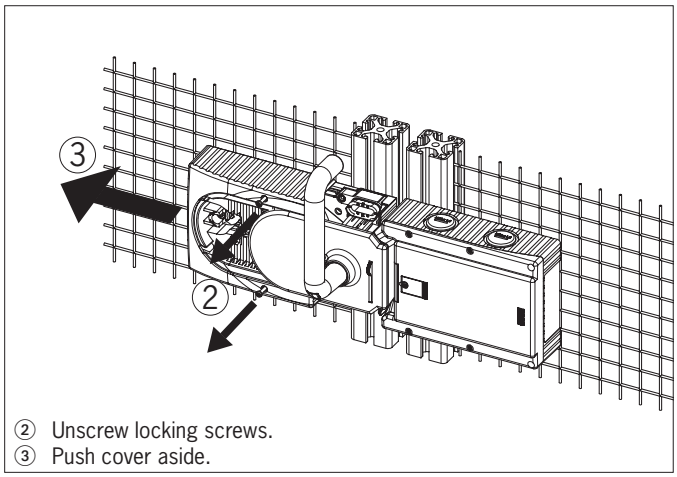

② Unscrew locking screws.
③ Push cover aside.

Fig. 10: Changing actuating direction, steps ② and ③

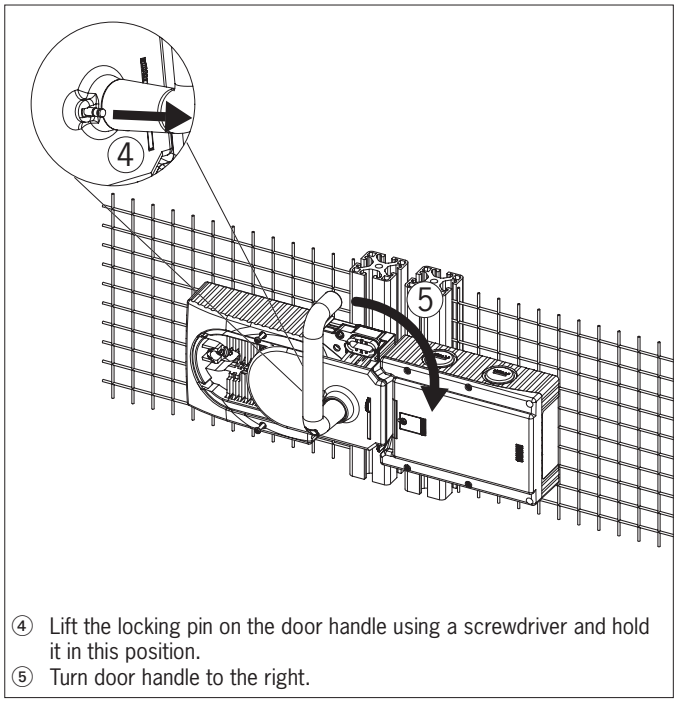

④ Lift the locking pin on the door handle using a screwdriver and hold it in this position.
⑤ Turn door handle to the right.

Fig. 11: Changing actuating direction, steps ④ and ⑤

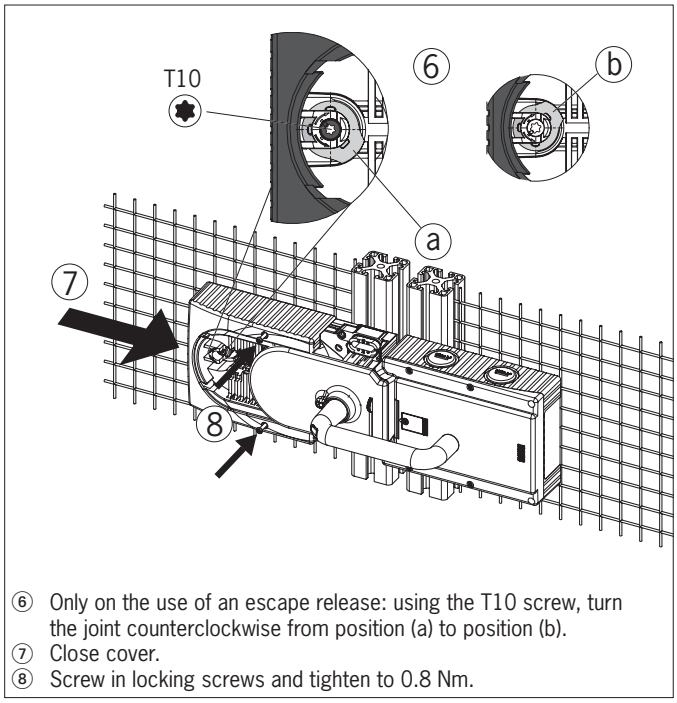

⑥ Only on the use of an escape release: using the T10 screw, turn the joint counterclockwise from position (a) to position (b).
⑦ Close cover.
⑧ Screw in locking screws and tighten to 0.8 Nm.

Fig. 12: Changing actuating direction, steps ⑥ to ⑧

EN

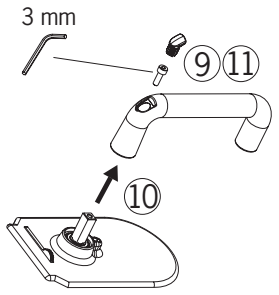

⑨ Remove cover and undo hexagon socket screw.
⑩ Move door handle 90° clockwise and fasten again.
⑪ Tighten hexagon socket screw to 3 Nm.

Fig. 13: Changing actuating direction, steps ⑨ to ⑪

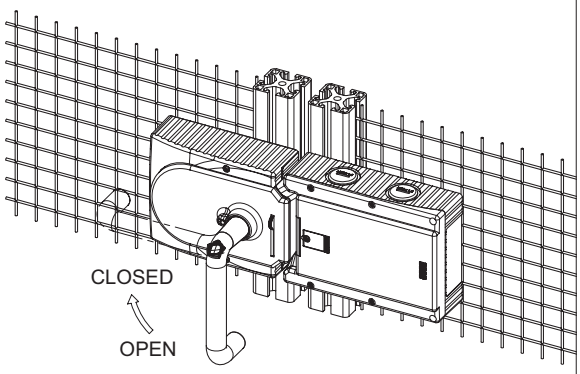

⑫ State after repositioning

Fig. 14: Changing actuating direction, final state

12. Protection against environmental effects

Lasting and correct safety function requires that the system must be protected against foreign bodies such as swarf, sand, blasting shot, etc., which can become lodged in the locking and handle modules. For this purpose, a suitable installation position should be selected.

Cover device during painting work!

13. Electrical connection

WARNING

In the event of a fault, loss of the safety function due to incorrect connection.

- To ensure safety, both safety outputs (FO1A and FO1B) must always be evaluated.
- The monitoring outputs must not be used as safety outputs.
- Lay the connecting cables with protection to prevent the risk of short circuits.

CAUTION

Risk of damage to equipment or malfunctions as a result of incorrect connection.

- The inputs on a connected evaluation unit must be positive switching, as the two outputs on the safety switch deliver a level of +24 V in the switched-on state.
- All the electrical connections must either be isolated from the mains supply by a safety transformer according to EN IEC 61558-2-6 with limited output voltage in the event of a fault, or by other equivalent insulation measures.
- All electrical outputs must have an adequate protective circuit for inductive loads. The outputs must be protected with a free-wheeling diode for this purpose. Varistors and RC interference suppression units must not be used.
- Power devices which are a powerful source of interference must be installed in a separate location away from the input and output circuits for signal processing. The cable routing for safety circuits should be as far away as possible from the cables of the power circuits.
- To prevent EMC problems, it is imperative you follow the chapter *13.5. Notes on cable laying on page 27*. Follow EMC notes on devices in the immediate vicinity of the MGB system and its cables.
- In order to avoid EMC interference, the physical environmental and operating conditions at the installation site of the device must comply with the requirements according to the standard DIN EN 60204-1:2006, section 4.4.2 (EMC).

Important!

- If the device does not appear to function when the operating voltage is applied (e.g. green Power LED does not illuminate), the safety switch must be returned to the manufacturer.
- To ensure the stated degree of protection is achieved, the cover screws must be tightened to a tightening torque of 1 Nm.
- Tighten screw for the cover for the auxiliary release to 0.5 Nm.

EN

13.1. Notes about UL

Important!

- This device is intended to be used with a Class 2 power source in accordance with UL1310 [1].
  As an alternative an LV/C (Limited Voltage/Current) power source with the following properties can be used:
  - This device shall be used with a suitable isolating source in conjunction with a fuse in accordance with UL248. The fuse shall be rated max. 3.3 A and be installed in the max. 30 V DC power supply to the device in order to limit the available current to comply with the UL requirements. Please note possibly lower connection ratings for your device (refer to the technical data).

1) Note on the scope of the UL approval: only for applications as per NFPA 79 (Industrial Machinery). The devices have been tested as per the requirements of UL508 (protection against electric shock and fire).

13.2. Safety in case of faults

- The operating voltage UB is reverse polarity protected.
- The safety outputs FO1A/FO1B are short circuit-proof.
- A short circuit between FI1A and FI1B or FO1A and FO1B is detected by the device.
- A short circuit in the cable can be excluded by laying the cable with protection.

13.3. Fuse protection for power supply

The power supply must be provided with fuse protection depending on the number of devices and the current required for the outputs. The following rules apply:

Max. current consumption of an individual device I_{max}

I_{max} = I_{UB} + I_{UA} + $I_{FO1A+FO1B}$

I_{UB} = Device operating current (80 mA)

I_{UA} = Load current of monitoring outputs OD, OT, OL and OI (4 x max. 50 mA) + solenoid + control elements

$I_{FO1A+FO1B}$ = Load current of safety outputs FO1A + FO1B (2 x max. 200 mA)

AR

Max. current consumption of a switch chain ΣI_{max}

$\Sigma I_{max} = I_{FO1A+FO1B} + n \times (I_{UB} + I_{UA})$

n = Number of connected devices

Assignment of the currents to the fuse circuits

Current	Fuse circuit F1	Fuse circuit F2
I_{UB}	80 mA	
$I_{FO1A+FO1B}$	(2 x max. 200 mA)	
I_{UA}		$I_{solenoid}$ = 375 mA $I_{OD,OT,OL,OI}$ = (4 x max. 50 mA) $I_{control\ elements}$ = max. 100 mA (per control element) $I_{indicators}$ = max. 5 mA (per indicator)

13.4. Requirements for connecting cables

CAUTION

Risk of damage to equipment or malfunctions as a result of incorrect connecting cables.

- If other connection components are used, the requirements in the following table apply. EUCHNER provides no warranty for safe function in case of failure to comply with these requirements.

Observe the following requirements with respect to the connecting cables:

Parameter	Value	Unit
Conductor cross-section, min.	0.13	mm²
R max.	60	Ω/km
C max.	120	nF/km
L max.	0.65	mH/km

13.5. Notes on cable laying

Lay all MGB connecting cables in a common cable harness.

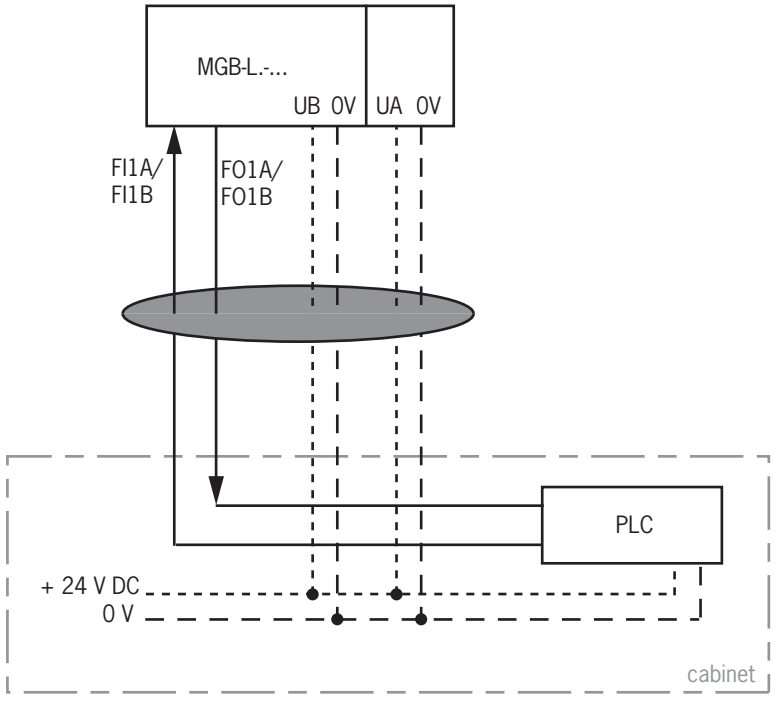

Important: lay cables in a common harness

Fig. 15: Stipulated cable laying

EN

13.6. Changing device configuration (using DIP switches)

Tip!

You will find an animation on device configuration at www.euchner.com.

DIP switches

The device can be configured using the DIP switches. The following settings are possible:

- Changing system family (AR/AP switching)
- Deactivating guard lock monitoring
- Activating release monitoring (possible only with active guard lock monitoring)

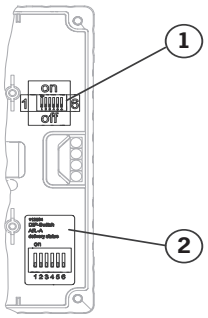

Position of the switches

Position	Description
1	DIP switches
2	Sticker with factory setting

Function of the switches

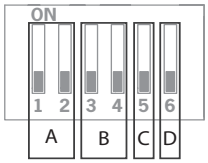

Detail	Switch	Function
A	1+2	on: device is operated as an AP system
		off: device is operated as an AR system
B	3+4	on: guard lock monitoring is deactivated
		off: guard lock monitoring is active (usually factory setting)
C	5	on: configuration possible
		off: configuration inhibited (factory setting)
D	6	on: release monitoring is activated
		off: release monitoring is deactivated (usually factory setting)

13.6.1. Changing system family (AR/AP switching)

CAUTION

Malfunction due to incorrect configuration or incorrect connection.

- Note that the terminal assignment also changes on changing the configuration (see chapter *13.9. Terminal assignment and contact description on page 32*).

1. Switch off power supply.
2. Set DIP switches 1, 2 and 5 as shown.

For changing from AR => AP	For changing from AP => AR
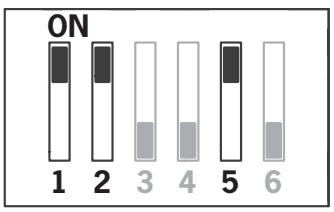	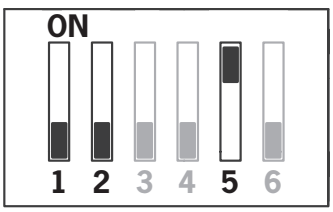

3. Switch on power supply for 5 s.

➡ The change is confirmed by the illumination of the Power LED. All other LEDs are off.

4. Switch off power supply and set DIP switch 5 to OFF.

➡ The next time the device is started, it operates in the operating mode set.

13.6.2. Deactivating guard lock monitoring

WARNING

Risk of injury due to inactive guard lock monitoring.

- With inactive guard lock monitoring, the guard locking position does not influence the safety outputs. The guard can be opened immediately. This setting is not allowed to be used in applications in which, e.g., there is a hazard due to overtraveling machine movements. With inactive guard lock monitoring, guard locking must be used only for process protection.

1. Switch off power supply.
2. Set DIP switches 3-5 as shown.

Deactivating guard lock monitoring	Activating guard lock monitoring
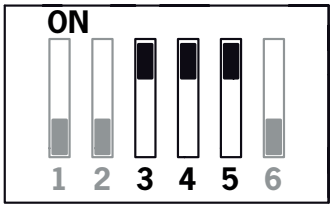	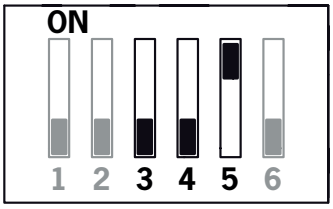

3. Switch on power supply for 5 s.

➡ The change is confirmed by the illumination of the Power LED. All other LEDs are off.

4. Switch off power supply and set DIP switch 5 to OFF.

➡ The next time the device is started, it operates in the operating mode set.

13.6.3. Activating release monitoring

Important!

Release monitoring can be activated only if guard lock monitoring is also active.

NOTICE

When release monitoring is active, the system enters into a latching fault when the escape release or auxiliary release is actuated.

See *System status table*, *signal sequence incorrect* status (DIA red, Lock flashes 1 time).

1. Switch off power supply.
2. Set DIP switches 5 and 6 as shown.

Deactivating release monitoring	Activating release monitoring
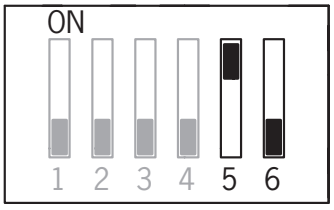	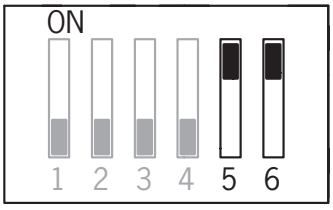

3. Switch on power supply for 5 s.

➡ The change is confirmed by the illumination of the Power LED. All other LEDs are off.

4. Switch off power supply and set DIP switch 5 to OFF.

➡ The next time the device is started, it operates in the operating mode set.

EN

13.7. Notes on operation with control systems

Observe the following guidelines for connection to safe control systems:

General notes

- Use a common power supply for the control system and the connected safety switches.
- A pulsed power supply must not be used for UB/UA. Tap the supply voltage directly from the power supply unit. If the power supply is connected to a terminal of a safe control system, this output must provide sufficient electrical current.
- The safety outputs (FO1A and FO1B) can be connected to the safe inputs of a control system. Prerequisite: the input must be suitable for pulsed safety signals (OSSD signals, e.g. from light grids). The control system must tolerate test pulses on the input signals. This normally can be set up by parameter assignment in the control system. Observe the notes of the control system manufacturer. For the pulse duration of your safety switch, please refer to chapter *15. Technical data on page 38*.
- The inputs on a connected evaluation unit must be positive switching, as the two outputs on the safety switch deliver a level of +24 V in the switched-on state.

AR

- Always connect inputs FI1A and FI1B directly to a power supply unit or to outputs FO1A and FO1B of another EUCHNER AR device (series connection). Pulsed signals must not be present at inputs FI1A and FI1B. The test pulses are also present when the safety outputs are switched off (only on FO1A). Depending on the inertia of the downstream device (control system, relay, etc.), this can lead to short switching processes.

Guard locking control

- Test pulses up to max. 5 ms in duration at intervals of min. 100 ms are tolerated on IMP1, IMP2 and IMM.

	NOTICE Due to the fact that short circuit monitoring of the safety outputs FO1A/FO1B is performed by the device itself, the Performance Level in accordance with EN 13849 is not reduced if the control system pulsing is switched off.

	Tip! A detailed example of connecting and setting the parameters of the control system is available for many devices at www.euchner.com, in the area *Downloads/Applications/MGB*. The features of the respective device are dealt with there in greater detail.

13.8. Connection of guard locking control

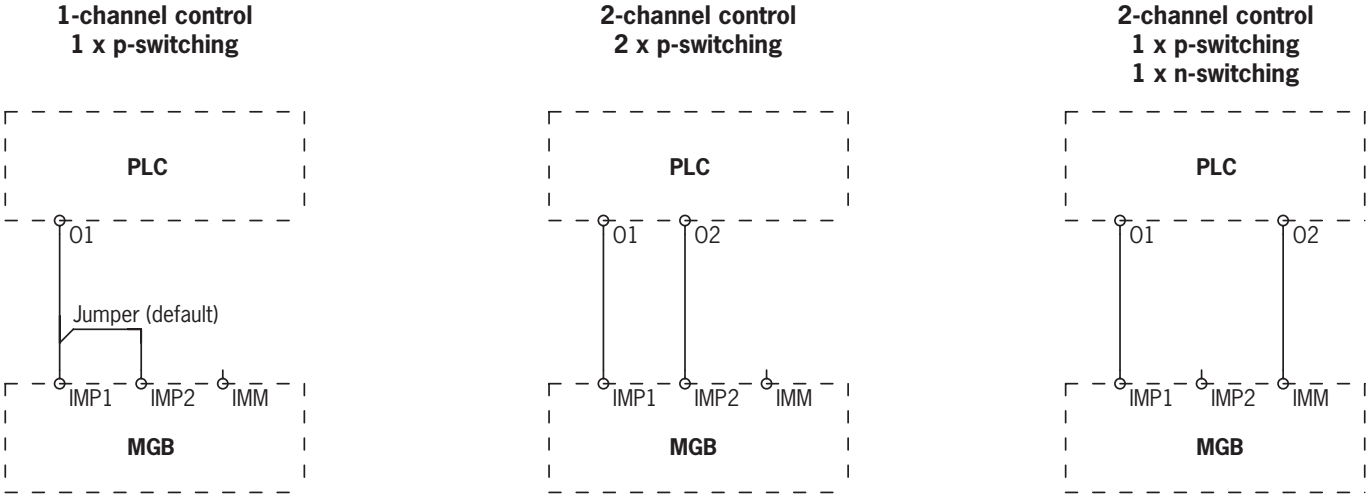

Fig. 16: Connection options for guard locking control

With 2-channel control, the jumper between IMP1 and IMP2 must be removed. Connection as shown above. Further adaptations may be required for some device versions with plug connector M23 (RC18) (see associated data sheet).

EN

13.9. Terminal assignment and contact description

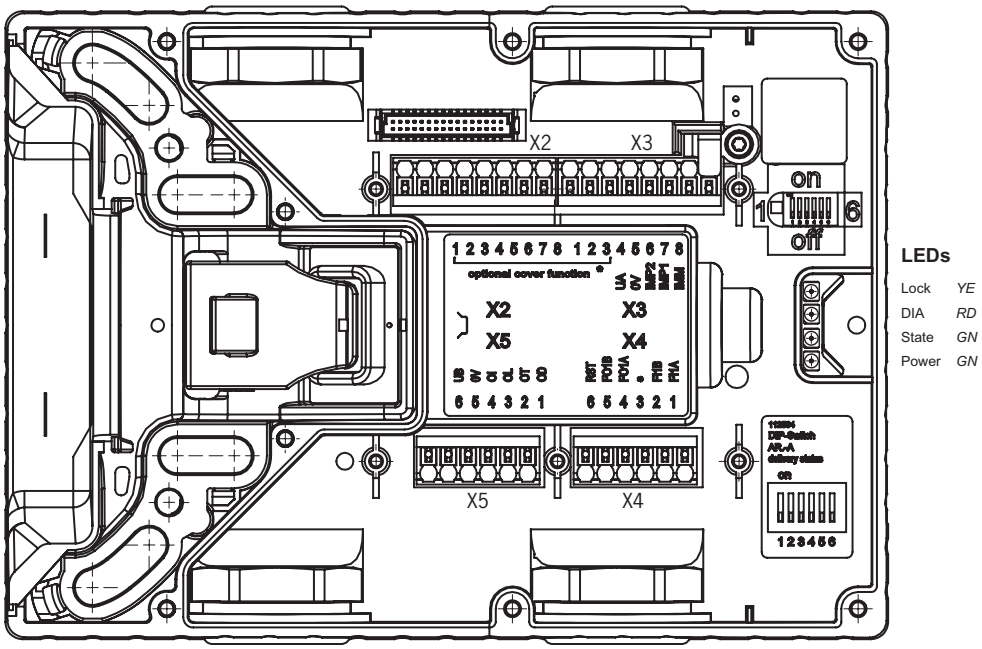

Fig. 17: Connections and LEDs

Terminal	Designation	Description	
X3.1 to X3.3	-	See associated data sheet	
X3.4	UA	Power supply for the guard locking solenoid, monitoring outputs and cover assembly, DC 24 V, must be present continuously so that the guard locking solenoid functions.	
X3.5	0V	Ground, DC 0 V (connected internally to X5.5).	
X3.6	IMP2	Control voltage for switching the guard locking on and off, DC 24 V (see chapter *13.8. Connection of guard locking control on page 31*).	IMP1/IMP2 are usually bridged (jumper) as the default setting on delivery
X3.7	IMP1	Control voltage for switching the guard locking on and off, DC 24 V (see chapter *13.8. Connection of guard locking control on page 31*).	
X3.8	IMM	Control voltage for switching the guard locking on and off, 0 V (see chapter *13.8. Connection of guard locking control on page 31*).	
X4.1	FI1A	***With AR configuration:*** enable input for channel A, connect to DC 24 V in separate operation. In case of switch chains, connect output signal FO1A from previous device. ***With AP configuration:*** input is not evaluated.	
X4.2	FI1B	***With AR configuration:*** enable input for channel B, connect to DC 24 V in separate operation. In case of switch chains, connect output signal FO1B from previous device. ***With AP configuration:*** input is not evaluated.	
X4.3	-	See associated data sheet	
X4.4	FO1A	Safety output channel A (function dependent on DIP switch setting) ***Guard lock monitoring active:*** ON when door is closed and locked. ***Guard lock monitoring inactive:*** ON when door is closed and bolt tongue is inserted.	
X4.5	FO1B	Safety output channel B (function dependent on DIP switch setting) ***Guard lock monitoring active:*** ON when door is closed and locked. ***Guard lock monitoring inactive:*** ON when door is closed and bolt tongue is inserted.	
X4.6	RST	Reset input, device is reset if DC 24 V is applied to RST for at least 3 s.	
X5.1	OD	Door monitoring output, ON when the door is closed.	
X5.2	OT	Bolt tongue monitoring output, ON when the door is closed and the bolt tongue is inserted into the locking module.	
X5.3	OL	Guard lock monitoring output, ON when the door is closed and locked.	
X5.4	OI	Diagnostic monitoring output, ON when the device is in the fault state.	
X5.5	0V	Ground, DC 0 V (connected internally to X3.5).	
X5.6	UB	Power supply, DC 24 V	
X2.1 to X2.8	-	See associated data sheet	
X1	-	Reserved for connection of the cover circuit board (only for populated covers)	

Table 2: Terminal assignment and contact description

13.10. Operation as separate device

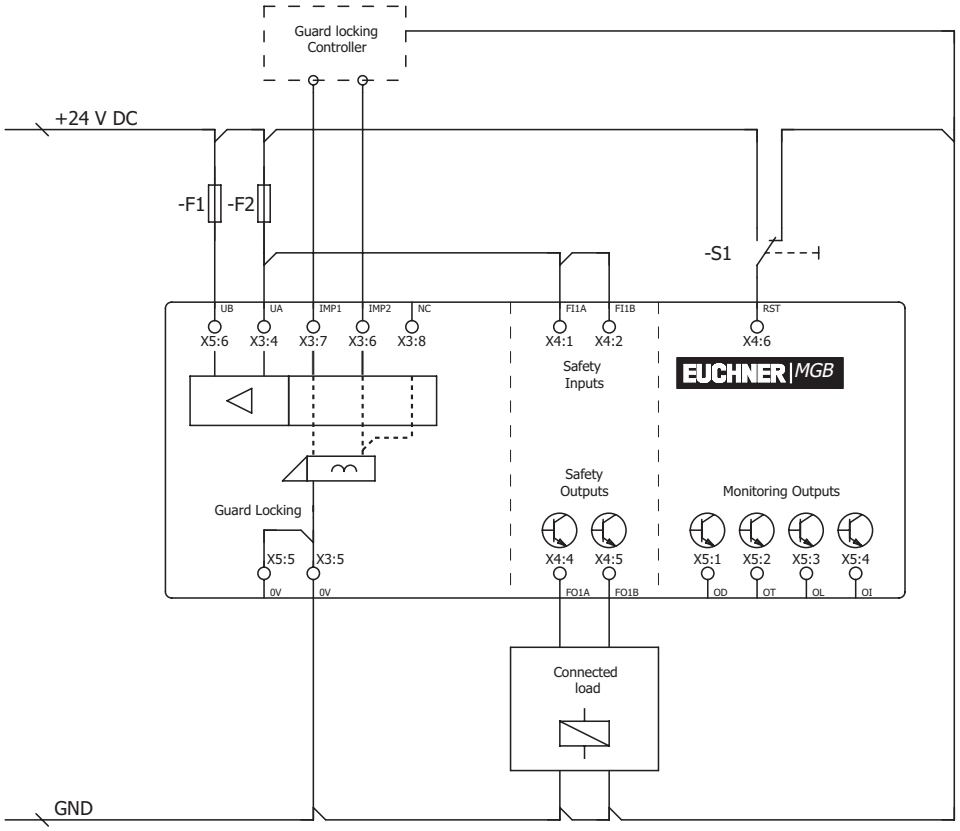

Fig. 18: Connection example for separate operation

The switches can be reset via the RST input. To do this, a voltage of 24 V is applied to the RST input for at least 3 seconds. The supply voltage to the switches is interrupted during this time. The RST input must be connected to 0 V if it is not used.

EN

13.11. Operation in an AR switch chain

AR

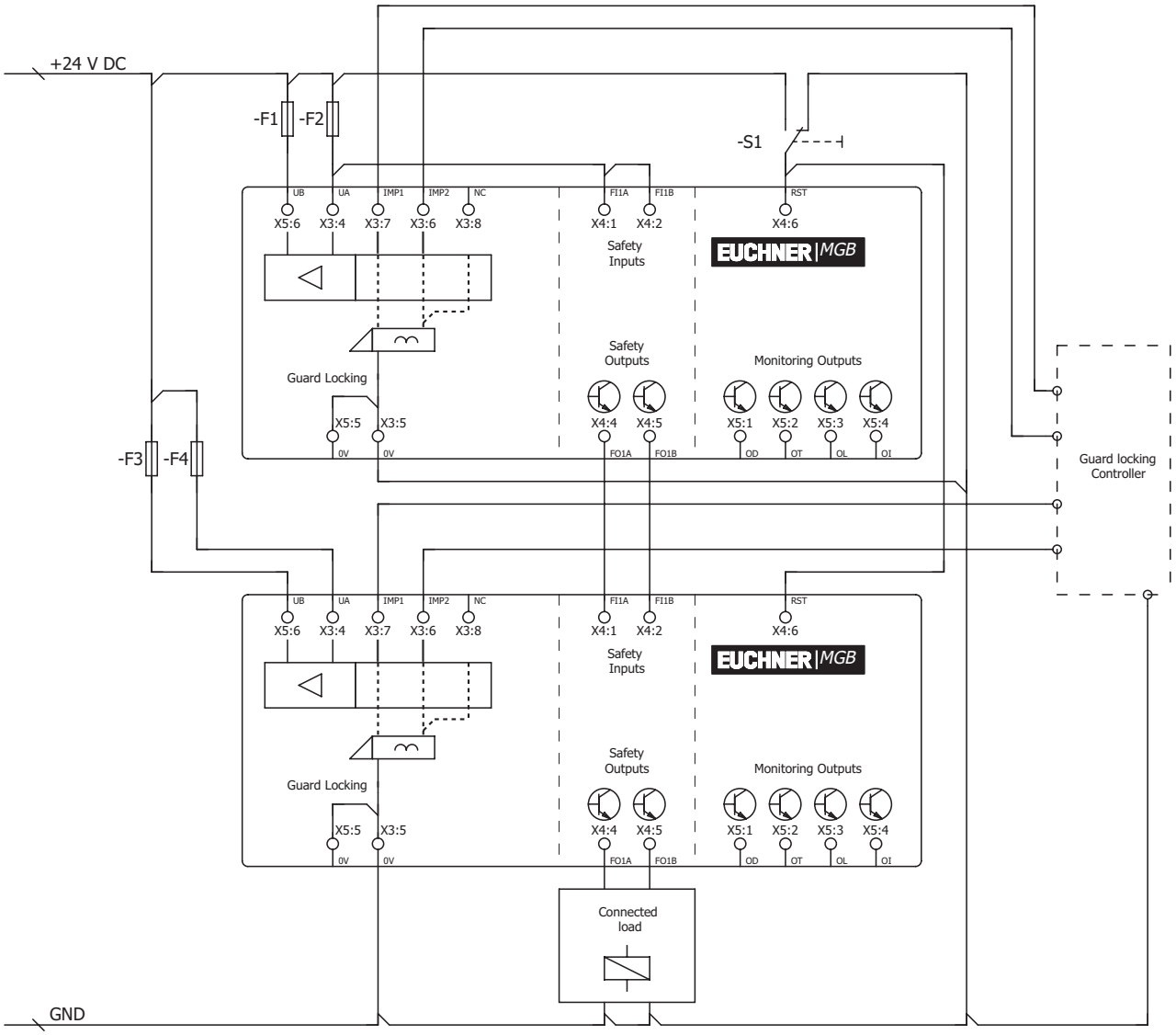

Fig. 19: Connection examples for operation in a CES-AR switch chain

For detailed information on operation in an AR switch chain, see the related CES-AR operating instructions. The locking module MGB-L1-AR-…/MGB-L2-AR-… behaves in the switch chain in practice like a safety switch CES-AR. The deviations from the CES-AR are described in the following.

13.12. Information on operation in an AR switch chain

AR

13.12.1. System times

The locking module has longer reaction times than a CES-AR switch (see chapters *15. Technical data on page 38* and *15.2. Typical system times on page 41*).

13.12.2. Wiring an AR switch chain

To prevent earth loops, the wiring should be in a star configuration (see *Fig. 20*).

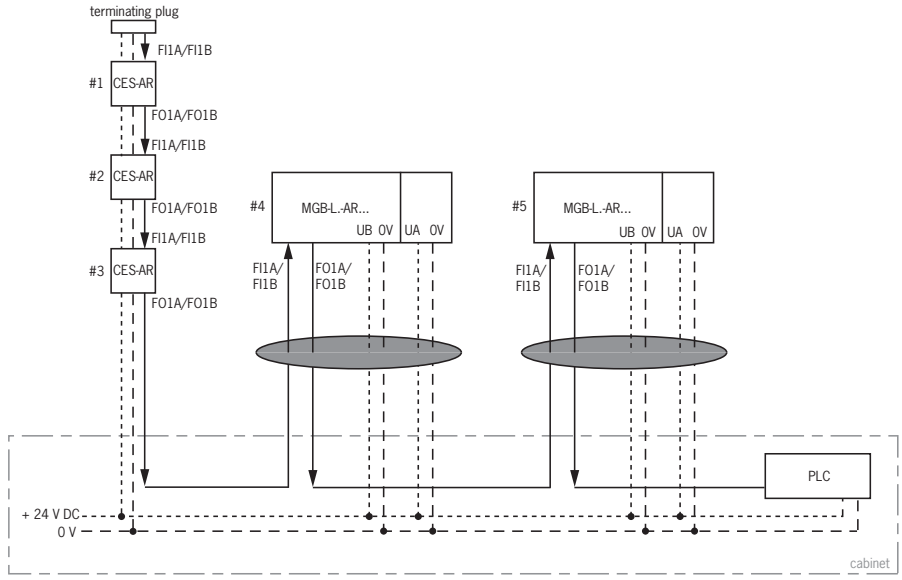

Important: lay cables in a common harness

Fig. 20: Central wiring of an AR switch chain in the control cabinet

13.12.3. Number of devices in switch chains

In a pure MGB switch chain a maximum of ten devices can be connected in series. In mixed switch chains (e.g. MGB together with CES-AR) the maximum number of devices is also ten.

13.12.4. Resetting in switch chains

ⓘ	**Important!** Use the reset input (RST) for resetting in AR switch chains. All devices in the chain must be reset simultaneously. Resetting individual switches will result in faults.

EN

14. Setup

14.1. Teach-in operation (only for MGB unicode)

The handle module must be assigned to the locking module using a teach-in function before the system comprising locking module and handle module forms a functional unit.

During a teach-in operation the safety outputs are switched off.

Important!

- The locking module disables the code for the previous handle module if teach-in is carried out for a new handle module. Teach-in is not possible again immediately for this device if a new teach-in operation is carried out. The disabled code is deleted in the locking module only after a third code has been taught-in.
- The locking module can be operated only with the last handle module taught-in.
- If, in teach-in standby, the locking module detects the handle module taught-in or a disabled handle module, teach-in standby is ended immediately and the locking module changes to normal operation.
- If the bolt tongue is in the actuating range for less than 60 s, the handle module is not taught-in.

Tip!

A teach-in adapter (order no. 122369) is available for easier teach-in of AR devices already mounted in a row or for device replacement. It is simply inserted between the connecting cable and the AR device. The device immediately enters teach-in operation on reconnection. After teach-in, the adapter is removed again and the MGB is connected normally.

Teaching-in handle module

1. Fit handle module.
2. Close safety system. Check for correct alignment and distance using the marking on the locking module and re-adjust if necessary.
3. Insert bolt tongue into the locking module.
4. Apply operating voltage to the locking module, optionally connect teach-in adapter.

➡ The green LED (State) flashes quickly (approx. 5 Hz). A self-test is performed during this time (approx. 10 s in case of AR configuration). Teach-in operation starts, green LED (State) flashes slowly (approx. 1 Hz). During the teach-in operation, the locking module checks whether the handle module is a disabled handle module. Provided this is not the case, the teach-in operation is completed after approx. 60 seconds, and the green LED (State) goes out. The new code has now been stored, and the old code is disabled.

5. To activate the handle module's code from the teach-in operation in the locking module, the operating voltage must then be switched off at the locking module for min. 3 seconds. As an alternative, 24 V can be applied to the input RST for at least 3 seconds.

Teach-in in a series connection works analogously. Here, the complete series connection must be restarted using the input RST.

14.2. Mechanical function test

It must be possible to insert the bolt tongue easily into the locking module. To check, close guard several times and actuate door handle.

If available, check function of the escape release. With active guard locking, it must be possible to operate the escape release from the inside without excessive effort (approx. 40 N).

14.3. Electrical function test

AR

⚠	**WARNING** On usage in a switch chain with different AR devices (e.g. CES-AR, CET-AR), also follow the procedure for the functional check in the related operating instructions.

DIP

With active guard lock monitoring

1. Switch on operating voltage.

➡ The locking module carries out a self-test. With BR configuration: the green State LED flashes at 5 Hz for 10 s. The State LED then flashes at regular intervals.

2. Close all guards and insert the bolt tongue into the locking module.
   In case of guard locking by solenoid force: activate guard locking.

➡ The safety outputs FO1A/FO1B are ON.

➡ The machine must not start automatically.

➡ It must not be possible to open the guard.

➡ The green State LED and the yellow Lock LED are illuminated continuously.

3. Enable operation in the control system.

➡ It must not be possible to deactivate guard locking as long as operation is enabled.

4. Disable operation in the control system and deactivate guard locking.

➡ The guard must remain locked until there is no longer any risk of injury.

➡ It must not be possible to start the machine as long as guard locking is deactivated.

➡ It must be possible to open the guard.

Repeat steps 2-4 for each guard.

With inactive guard lock monitoring

1. Switch on operating voltage.

➡ The locking module carries out a self-test. With BR configuration: the green State LED flashes at 5 Hz for 10 s. The State LED then flashes at regular intervals.

2. Close all guards and insert the bolt tongue into the locking module. As soon as the bolt tongue is inserted into the locking module, the safety outputs FO1A/FO1B are ON. This is regardless of whether the guard locking is active or not.

➡ The machine must not start automatically.

➡ The green State LED illuminates continuously. The yellow Lock LED is ON for a long time with a short interruption or is permanently ON (depending on the state of the guard locking).

3. Enable operation in the control system.

4. If necessary, deactivate guard locking and open guard.

➡ The machine must switch off and it must not be possible to start it as long as the guard is open.

Repeat steps 2-4 for each guard.

EN

15. Technical data

NOTICE

If a data sheet is included with the product, the information on the data sheet applies in case of discrepancies with the operating instructions.

Parameter	Value	Unit
Housing material	Fiber glass reinforced plastic Die-cast zinc, nickel plated Stainless steel	
Dimensions	See chapter *8.4. Dimension drawing on page 15*	
Weight Locking module Handle module Escape release	 0.75 1.00 0.50	kg
Ambient temperature at U_B = DC 24 V	-20 … +55	°C
Degree of protection Cover not populated/populated with buttons/indicators/selector switches Cover populated with key-operated switch Cover populated with key-operated rotary switch FS22	 IP65 IP54 IP42	
Safety class	III	
Degree of contamination	3	
Installation position	Any	
Locking force F_{zh}	2,000	N
SAR_{SK}	20 [1]	mm
Mechanical life - In case of use as door stop, and 1 Joule impact energy	1 x 10^6 0.1 x 10^6	
Connection	4 cable entries M20x1.5 or plug connector	
Conductor cross-section (rigid/flexible) - With cable end sleeve acc. to DIN 46228/1 - With cable end sleeve with collar acc. to DIN 46228/1	0.13 … 1.5 (AWG 24 … AWG 16) 0.25 … 1.5 0.25 … 0.75	mm^2
Operating voltage UB (reverse polarity protected, regulated, residual ripple < 5%)	24 +10% / -15% (PELV)	V DC
Auxiliary voltage UA (reverse polarity protected, regulated, residual ripple < 5%)	24 +10% / -15% (PELV)	V DC
Current consumption I_{UB} (no load on any outputs)	80	mA
Current consumption I_{UA} - With energized guard locking solenoid and unloaded outputs OI, OL, OT and OD - Pushbutton S (unloaded, per LED)	 375 5	mA
External fuse	See chapter *13.3. Fuse protection for power supply on page 26*	
Safety outputs FO1A/FO1B	**Semiconductor outputs, p-switching, short circuit-proof**	
Test pulses	AR < 1,000/AP < 300	µs
Test pulse interval	Min. 100	ms
Output voltage U_{FO1A} / U_{FO1B} [2] HIGH U_{FO1A} / U_{FO1B} LOW U_{FO1A} / U_{FO1B}	 U_B-2V … U_B 0 … 1	 V DC
Switching current per safety output	1 … 200	mA
Switching current per control input IMP1, IMP2 and IMM	20 … 25	mA
Utilization category acc. to EN IEC 60947-5-2	DC-13 24 V 200 mA Caution: outputs must be protected with a free-wheeling diode in case of inductive loads.	
Monitoring outputs - Output voltage [2] - Max. load	p-switching, short circuit-proof U_A - 2V … U_A Max. 50	 mA
Rated insulation voltage U_i	30	V
Rated impulse withstand voltage U_{imp}	1.5	kV

Resilience to vibration	Acc. to EN 60947-5-3		
Switching frequency	0.25		Hz
EMC protection requirements	Acc. to EN 60947-5-3		
Characteristics acc. to EN ISO 13849-1	**Guard lock monitoring**	**Control of guard locking (applies only to MGB-L1)**	
Category	4	4	
Performance Level	PL e	PL e	
PFH	3.7×10^{-9} / h	2.8×10^{-9} / h	
Mission time	20	20	years
B_{10D} (emergency stop)	0.13×10^{6}		
Emergency stop			
Operating voltage	5 … 24		V
Operating current	1 … 100		mA
Breaking capacity, max.	250		mW
Power supply LED	24		V DC
Controls and indicators			
Operating voltage	UA		V
Operating current	1 … 10		mA
Breaking capacity, max.	250		mW
Power supply LED	24		V DC

1) Applies only to use on sliding doors with activated guard lock monitoring
2) Values at a switching current of 50 mA without taking into account the cable lengths.

EN

15.1. Radio frequency approvals (for devices with FCC ID and IC on the type label)

Product description: Safety Switch

FCC ID: 2AJ58-09
IC: 22052-09

FCC/IC-Requirements

This device complies with part 15 of the FCC Rules and with Industry Canada's licence-exempt RSSs. Operation is subject to the following two conditions:

1) This device may not cause harmful interference, and

2) this device must accept any interference received, including interference that may cause undesired operation.

Changes or modifications not expressly approved by the party responsible for compliance could void the user's authority to operate the equipment.

NOTE: This equipment has been tested and found to comply with the limits for a Class A digital device, pursuant to part 15 of the FCC Rules. These limits are designed to provide reasonable protection against harmful interference when the equipment is operated in a commercial environment. This equipment generates, uses, and can radiate radio frequency energy and, if not installed and used in accordance with the instruction manual, may cause harmful interference to radio communications. Operation of this equipment in a residential area is likely to cause harmful interference in which case the user will be required to correct the interference at his own expense.

Le présent appareil est conforme aux CNR d'Industrie Canada applicables aux appareils radio exempts de licence. L'exploitation est autorisée aux deux conditions suivantes :

(1) l'appareil ne doit pas produire de brouillage, et

(2) l'utilisateur de l'appareil doit accepter tout brouillage radioélectrique subi, même si le brouillage est susceptible d'en compromettre le fonctionnement.

This device complies with the Nerve Stimulation Exposure Limits (ISED SPR-002) for direct touch operations.

Cet appareil est conforme aux limites d'exposition relatives à la stimulation des nerfs (ISED CNR-102) pour les opérations tactiles directes.

Supplier's Declaration of Conformity
47 CFR § 2.1077 Compliance Information

Unique Identifier:
MGB-L0-AR Series
MGB-L1-AR Series
MGB-L2-AR Series
MGB-L0-AP Series
MGB-L1-AP Series
MGB-L2-AP Series

Responsible Party – U.S. Contact Information
EUCHNER USA Inc.
6723 Lyons Street
East Syracuse, NY 13057

+1 315 701-0315
+1 315 701-0319
info(at)euchner-usa.com
http://www.euchner-usa.com

15.2. Typical system times

Important!

The system times given are maximum values for one device.

Ready delay:

AR ***In case of AR configuration, the following applies:*** After switching on, the device carries out a self-test for 10 s. The system is ready for operation only after this time.

AP ***In case of AP configuration, the following applies:*** After switching on, the device carries out a self-test for 0.5 s. The system is ready for operation only after this time.

Turn-on time of safety outputs:

AR ***In case of AR configuration, the following applies:*** The max. reaction time from the moment when the guard is locked to the moment when the safety outputs switch on T_{on} is 570 ms.

AP ***In case of AP configuration, the following applies:*** The max. reaction time from the moment when the bolt tongue is inserted to the moment when the safety outputs switch on T_{on} is 570 ms.

AR **Simultaneity monitoring of safety inputs FI1A/FI1B:** If the safety inputs have different switching states for longer than 150 ms, the safety outputs FO1A/FO1B will be switched off. The device enters the fault state.

Risk time according to EN 60947-5-3:

DIP ***The following applies to active guard lock monitoring:*** If guard locking is no longer effective, the safety outputs FO1A and FO1B will be switched off after a maximum of 350 ms.

This value applies to a single switch. The risk time increases by 5 ms for each additional switch in a chain.

DIP ***The following applies to inactive guard lock monitoring:*** If the bolt tongue is pulled out of the locking module, the safety outputs FO1A and FO1B will be switched off after a maximum of 350 ms.

This value applies to a single switch. The risk time increases by 5 ms for each additional switch in a chain.

Difference time: The safety outputs FO1A and FO1B switch with a slight time offset. They both have the ON state at the latest after a difference time of 10 ms.

Time offset: The max. permissible time offset between switch-on of operating voltage UB and auxiliary voltage UA is 1 s.

16. System states

16.1. Key to symbols

○	LED not illuminated
✳	LED illuminated
✳ 10 Hz (8 s)	LED flashes for 8 seconds at 10 Hz
✳ 3 x	LED flashes three times
X	Any state

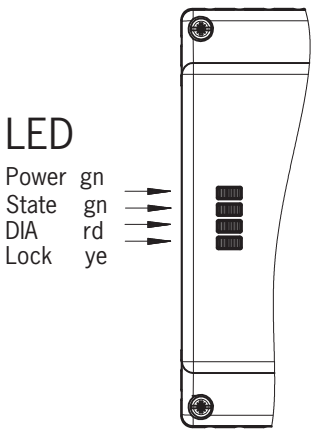

EN

16.2. System status table MGB-AR

Operating mode		Safety inputs FI1A and FI1B	Door position	Position of the bolt tongue	Guard locking	Safety outputs FO1A and FO1B	Door monitoring output (OD)	Bolt tongue monitoring output (OT)	Guard lock monitoring output (OL)	Diagnostic monitoring output (OI)	LED indicator: Power (green)	LED indicator: STATE (green)	LED indicator: DIA (red)	LED indicator: Lock (yellow)	State
Self-test		X	X	X	X	OFF	OFF	OFF	OFF	OFF		5 Hz		○	Self-test after power-up
Normal operation		X	open	not inserted	OFF	OFF	OFF	OFF	OFF	OFF		long OFF, short ON		○	Normal operation, door open
		X	closed	not inserted	OFF	OFF	ON	OFF	OFF	OFF		long ON, short OFF		○	Normal operation, door closed
		OFF	closed	inserted	OFF	OFF	ON	ON	OFF	OFF		long ON, short OFF		long ON, short OFF	Normal operation, door closed, bolt tongue inserted, safety inputs FI1A/FI1B OFF
		ON	closed	inserted	OFF	OFF	ON	ON	OFF	OFF		long ON, short OFF	○	long ON, short OFF	**With active guard lock monitoring:** normal operation, door closed, bolt tongue inserted. Safety inputs FI1A/FI1B are ON. Safety outputs FO1A and FO1B are OFF
						ON									**With inactive guard lock monitoring:** normal operation, door closed, bolt tongue inserted. Safety inputs FI1A/FI1B are ON. Safety outputs FO1A and FO1B are ON
		OFF	closed	inserted	ON	OFF	ON	ON	ON	OFF		long ON, short OFF			**Operation in an AR chain:** normal operation, door closed and locked. Safety outputs on the previous device OFF
		ON	closed	inserted	ON	ON	ON	ON	ON	OFF					**Operation as separate device:** normal operation, door closed and locked.
															Operation in an AR chain: normal operation, door closed and locked. Safety outputs on the previous device ON
Teach-in standby (only for MGB unicode)		X	open	not inserted	OFF	OFF	OFF	OFF	OFF	OFF		3 x		○	Door open; device is ready for teach-in of another handle module (only 3 min. after Power UP)
Setup (only for MGB unicode)		X	closed	inserted	ON	OFF	OFF	OFF	OFF	OFF		1 Hz		○	Tip for teach-in operation: to prevent the interruption of teach-in operations, close door and switch on guard locking.
		X	X	X	X	OFF	OFF	OFF	OFF	OFF		○		○	Positive acknowledgment after completion of teach-in operation
Diagnostics		X	X	X	X	X	OFF	OFF	OFF	ON		1 x		○	Error during teach-in/configuration or invalid DIP switch setting
		erro-neous	X	X	X	OFF	OFF	OFF	OFF	ON		2 x		○	FI1A/FI1B input error (e.g. missing test pulses, illogical switching state from previous switch)
		X	X	X	X	OFF	X	X	X	OFF		3 x		○	Handle module read error (e.g. error in code)
		X	X	X	X	OFF	OFF	OFF	OFF	ON		4 x		○	Output fault (e.g. short circuit, loss of switching capability) or short circuit at the outputs
		X	X	X	X	X	OFF	OFF	OFF	ON		○		○	Internal fault (e.g. component fault, data error)
		X	X	X	X	OFF	OFF	OFF	OFF	ON		○		1 x	Signal sequence erroneous (e.g. broken bolt tongue). With active release monitoring: escape release or auxiliary release was actuated.
		X	X	X	X	X	OFF	OFF	OFF	ON		○		2 x	Control inputs IMP1, IMP2, IMM invalid; switch control inputs off for min. ½ s and switch on again to reset

After remedying the cause, use the reset function (see chapter *17. Troubleshooting and assistance on page 44*) or briefly disconnect the power supply. Please contact the manufacturer if the fault could not be reset after restarting.
Important: If you do not find the displayed device status in the system status table, this indicates an internal device fault. In this case, you should contact the manufacturer.

16.3. System status table MGB-AP

Operating mode	Door position	Position of the bolt tongue	Guard locking	Safety outputs FO1A and FO1B	Door monitoring output (OD)	Bolt tongue monitoring output (OT)	Guard lock monitoring output (OL)	Diagnostic monitoring output (OI)	LED indicator: Power (green)	LED indicator: State (green)	LED indicator: DIA (red)	LED indicator: Lock (yellow)	State
Normal operation	open	not inserted	OFF	OFF	OFF	OFF	OFF	OFF		long OFF, short ON		○	Normal operation, door open
	closed	not inserted	OFF	OFF	ON	OFF	OFF	OFF		long ON, short OFF		○	Normal operation, door closed
	closed	inserted	OFF	OFF	ON	ON	OFF	OFF		long ON, short OFF	○	long ON, short OFF	**With active guard lock monitoring:** normal operation, door closed, bolt tongue inserted. Safety outputs FO1A and FO1B [+] are OFF
	closed	inserted	OFF	ON	ON	ON	OFF	OFF					**With inactive guard lock monitoring:** normal operation, door closed, bolt tongue inserted. Safety outputs FO1A and FO1B are ON
	closed	inserted	ON	ON	ON	ON	ON	OFF					Normal operation, door closed and locked.
Teach-in standby (only for MGB unicode)	open	not inserted	OFF	OFF	OFF	OFF	OFF	OFF		3 x		○	Door open; device is ready for teach-in of another handle module (only 3 min. after Power UP)
Setup (only for MGB unicode)	closed	inserted	ON	OFF	OFF	OFF	OFF	OFF		1 Hz		○	Tip for teach-in operation: to prevent the interruption of teach-in operations, close door and switch on guard locking.
	X	X	X	OFF	OFF	OFF	OFF	OFF		○		○	Positive acknowledgment after completion of teach-in operation
Diagnostics	X	X	X	OFF	OFF	OFF	OFF	ON		1 x		○	Error during teach-in/configuration or invalid DIP switch setting
	X	X	X	OFF	X	X	X	OFF		3 x		○	Handle module read error (e.g. error in code)
	X	X	X	OFF	OFF	OFF	OFF	ON		4 x		○	Output fault (e.g. short circuit, loss of switching capability) or short circuit at the outputs
	X	X	X	X	OFF	OFF	OFF	ON		○		○	Internal fault (e.g. component fault, data error)
	X	X	X	OFF	OFF	OFF	OFF	ON		○		1 x	Signal sequence erroneous (e.g. broken bolt tongue). With active release monitoring: escape release or auxiliary release was actuated.
	X	X	X	X	OFF	OFF	OFF	ON		○		2 x	Control inputs IMP1, IMP2, IMM invalid; switch control inputs off for min. ½ s and switch on again to reset

After remedying the cause, use the reset function (see chapter *17. Troubleshooting and assistance on page 44*) or briefly disconnect the power supply. Please contact the manufacturer if the fault could not be reset after restarting.
Important: If you do not find the displayed device status in the system status table, this indicates an internal device fault. In this case, you should contact the manufacturer.

EN

17. Troubleshooting and assistance

17.1. Resetting errors

Proceed as follows:

1. Open the guard.
2. Switch off operating voltage at the locking module for min. 3 seconds or connect 24 V to the input RST for min. 3 seconds.
   Alternatively, the internal reset (see *8. System overview on page 14*) can be pressed for 3 seconds with a pointed object, e.g. ball-point pen.

➡ The green LED (State) flashes quickly (approx. 5 Hz in case of AR configuration). A self-test is performed during this time (approx. 10 s in case of AR configuration). The LED then cyclically flashes three times.

3. Close guard and switch on guard locking.

➡ The system is in normal operation again.

17.2. Troubleshooting help on the Internet

You will find a help file on troubleshooting under *Support* in the service area at www.euchner.com.

17.3. Mounting help on the Internet

You will find an animation on the mounting process at www.euchner.com.

17.4. Application examples

You will find application examples on connecting the device to various control systems at www.euchner.com.

18. Service

If servicing is required, please contact:
EUCHNER GmbH + Co. KG
Kohlhammerstraße 16
70771 Leinfelden-Echterdingen
Germany

Service telephone:
+49 711 7597-500

E-mail:
info@euchner.de

Internet:
www.euchner.com

19. Inspection and service

WARNING

Loss of the safety function because of damage to the device.

- In case of damage, the affected module must be replaced completely. Only accessories or spare parts that can be ordered from EUCHNER may be replaced.
- Check the device for proper function at regular intervals and after every fault. For information about possible time intervals, refer to EN ISO 14119:2013, section 8.2.

Regular inspection of the following is necessary to ensure trouble-free long-term operation:

- Check the switching function (see chapter *14.3. Electrical function test on page 37*)
- Check the secure mounting of the devices and the connections
- Check for contamination.

No servicing is required. Repairs to the device are only allowed to be made by the manufacturer.

NOTICE

The year of manufacture can be seen in the lower right corner of the type label.

20. Declaration of conformity

The product complies with the following requirements:

- Machinery Directive 2006/42/EC (until January 19, 2027)
- Machinery Regulation (EU) 2023/1230 (from January 20, 2027)
- Cyber Resilience Act (EU) 2024/2847 (from December 11, 2027)

The EU declaration of conformity can be found at www.euchner.com. Enter the order number of your device in the search box. The document is available under *Downloads*.

Note on Directive 2014/53/EU RED (Radio Equipment Directive) and Delegated Regulation (EU) 2022/30

If this RED-compliant device is integrated into a machine or control system in accordance with the requirements in these instructions, this does not expand or change the device's radio characteristics and therefore does not influence its RED compliance.

EN

EUCHNER GmbH + Co. KG
Kohlhammerstraße 16
70771 Leinfelden-Echterdingen
Germany
info@euchner.de
www.euchner.com

Edition:
2119167-08-10/26
Title:
Operating Instructions Safety Systems
MGB-L1…-AR.-… / MGB-L2…-AR.-… and
MGB-L1…-AP.-… / MGB-L2…-AP.-…
(translation of the original operating instructions)
Copyright:
© EUCHNER GmbH + Co. KG, 10/2026

Subject to technical modifications; no responsibility is accepted for the accuracy of this information.